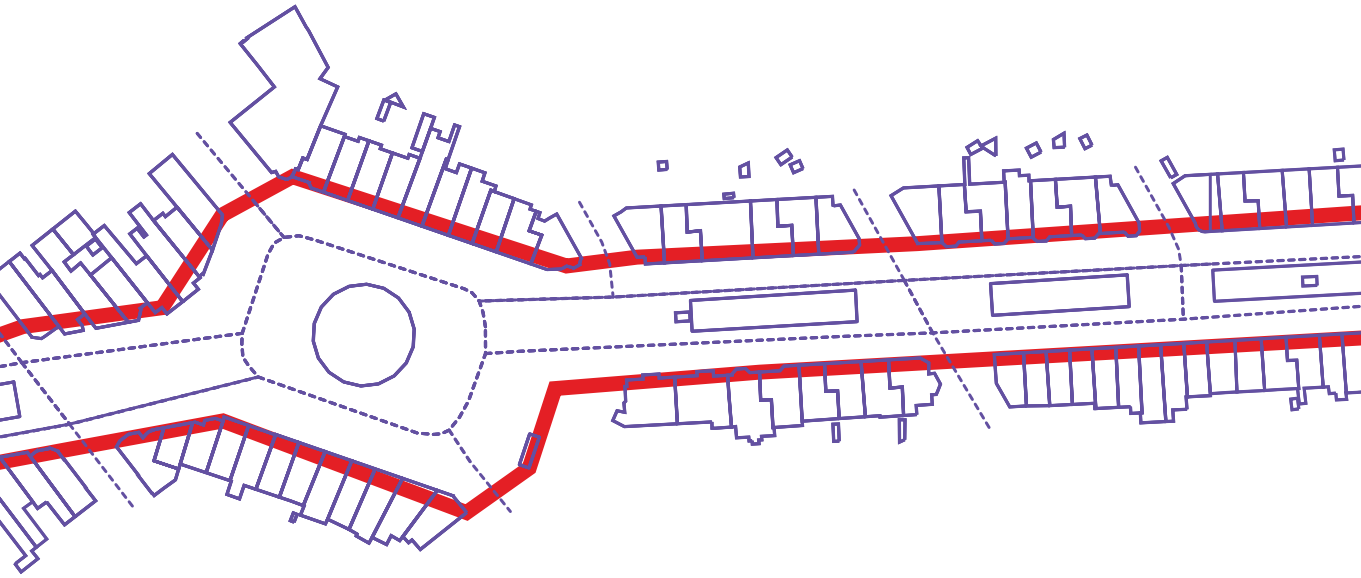

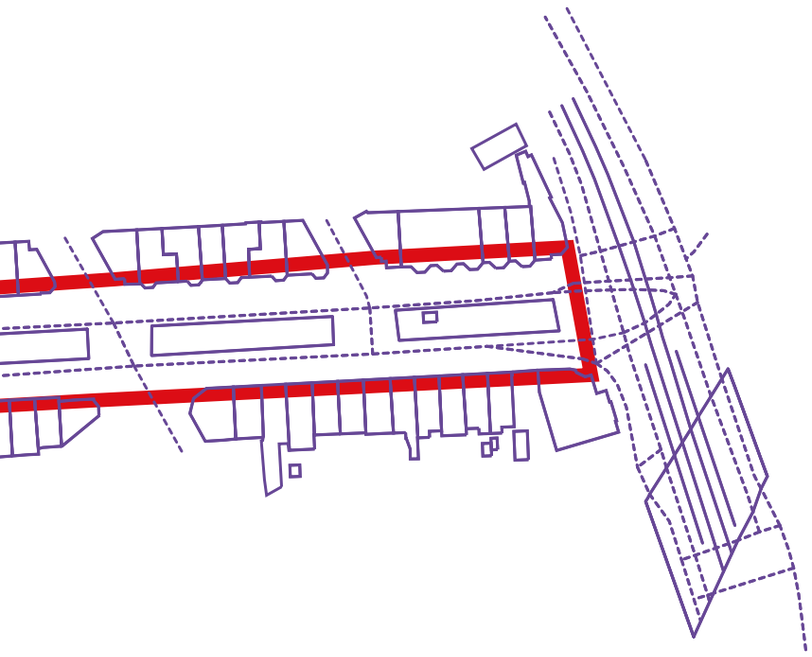

BORDERS OF ENCOUNTER

IN SEARCH FOR POINTS OF BELONGING

CATERINA TIOLI

Borders of Encounter
In Search for Points of Belonging

Caterina Tioli
Master of Interior Architecture, INSIDE
Royal Academy of Art The Hague, KABK
2022

Acknowledgements

I would like to thank all my tutors at INSIDE, that helped me to navigate since day one in the discovery and power that design has within social issue.
In addition, Anne Hoogewoning for introducing me to the beauty of writing. Gerjan Streng for asking the right questions and encourage the right reflections. Claudio Saccucci for guiding me in considering the spatial elements within my research, and to not get lost in the social part. Michou-Nanoun de Bruijn for your energy and positivity, that encouraged me to believe in my role of designer. Hans Venhuizen for the time, patience and devotion you have towards the department and the students.

I would like to thank the people around me for the support.
My classmates - Malte, Ilaria, Mae, Georgina, Tijtske, Ariana, Chen, Tom, Eda - for helping in creating a beautiful environment of respect and serenity.
In addition, Malte for being my design partner and influence on my design process. Ilaria for being my rock in difficult times, and my dearest friend in such a short time.
My housemates - Matteo, Giulia, Jakov, Armand, Alia and Marie - for allow me to find home one more time in a new place.
In addition, Giulia for being a sister, a friend, an housemate.
Matteo for the patience, support and the constant love.

I would like to thank the people that helped me in my research, giving a new perspective.
Robert Schutte and Aad van Schie for the interviews, walks and knowldege on Regentessekwartier. The first years student at INSIDE for taking place in the workshop.

And last, but definitely not least, my family for being my family and teaching me the need for one.
My sister, Camilla Tioli, for being the most courageous and positive person I know, even in the most challenging times. My parents for giving me once more the opportunity and support to do what I wanted.

Table of Contents

Prologue **13**

Intro **19**

Contextualising Borders **25**

The City of Today 28

The Hague 30

Defining Borders **37**

The Edge Condition 40

Regentessekwartier 42

Analysing Borders **73**

The Street 75

Regentesselaan 78

The Elements 101

Designing with Borders **479**

Space(s) and Time(s) 482

Objective and Conclusion 485

Literature and Images List **488**

“Developing a critical understanding of the socially produced fabric(s) that structure the way we live together enables us to better understand the space we share. What are the terms and conditions of our spatial contract? Some of these frameworks are laced with hatred and oppression, others with political utopia, scientific discourse, cultural prejudice, fundamental fears, and/or deep-rooted social forms such as the idea of community or the other.”[1]

1 H. Sarkis, “How Will We Live Together? Biennale Architettura 2021” (Silvana Editoriale, 2021), p 320

Prologue

Otherness
Noun
1 the fact of being different or strange[2]

Belong
Verb
1 to be in the right or suitable place[3]
2 to feel comfortable and happy in a particular situation or with a particular group of people[4]

2 Oxford Learner's Dictionaries, "Definition -Otherness" - [Online] Available: https://www.oxfordlearnersdictionaries.com/definition/english/otherness?q=otherness [Last visit: February 2022]

3 Oxford Learner's Dictionaries, "Definition - Belong" - [Online] Available: https://www.oxfordlearnersdictionaries.com/definition/english/belong?q=belong [Last visit: February 2022]

4 Ibid

I've tried and struggled for long, in my design practice, to take distance from my projects. They would always have a personal interest, which drove me and got me started, but I would always try to avoid focusing on that side. Explaining my personal experience within the project was never the main goal, because I always saw the practice of designer in service for 'others'. While studying and trying to answer the question "what is design?" and "what do designer actually do?", I've been asked to take position and to be bold in what I was saying. And because my projects were always very social and, partly, unavoidably political, I always felt I had to step out from my personal perspective, but instead capture the one of 'others'.
Today, through the focus on an auto-ethnographic research, I understand how I relate to my topics, it is how other people will relate. My eyes, my body, my mind and so my reflections, my thoughts and ideas, will be the lenses that will guide 'others'. Here I am, telling my story, from my angle - which might, as I hope, be someone else's point of view as well - in order for you to understand why it is important to address this topic.

I was born and grew up in Italy. The first years, I lived in the city of Milan (1.352 million habitants[5]). A few years later at the age of 7, I moved to a small village of approximately 500 habitants on the seaside. One bakery, three bars, one lingerie shop. They would call us "i milanesi" (the people from Milan), and yet when visiting friends in Milan, they would call us "i liguri"(the people from Liguria, the region of the village). Today, after 18 years, we are still called as such.
At the age of 17, bored and unstimulated by that small reality, I decided that I wanted to temporary leave. As part of an exchange programme, I was hosted in Brooklyn, New York City, for 11 months. I lived with a jewish family and attended a highschool in Queens. *From a town were I always defined as the outsider, I moved into a city where we were all outsiders*. New York City is called by many "the melting pot", and not by mistake, not by hearsay. When being introduced to people, they would always say "my name is [...], I was born in the United States but I'm officially from [...]." Polish, Cuban, French, Corean, etc. The people I met in New York were Americans but never only Americans, never only European, never only Asian, never only African. And I was "only" Italian, for years used to be between "only" Italians.

5 Statistiche Istat, "Popolazione residente dal 1º gennaio" - [Online] Available: http://dati.istat.it/Index.aspx?DataSetCode=DCIS_POPRES1 [Last visit: February 2022]

For the first time I was the "other", yet between many "others".

Once I went back to Italy, I decided to continue this "outsider" journey and moved to the Netherlands and enrolled myself in a Dutch, yet very international university, to study design.
During my years at Design Academy Eindhoven, 40% of students were Dutch, the rest of us were from different countries. We all grew up in different contexts and what was fascinating is that we made this visible in our projects. Today, I have lived in the Netherlands for 7 years and I'm still the 'outsider'. I haven't learned the language of the country I live in, I'm poorly familiar with its history and culture. I still consider this country as a temporary place, of coming and going. Yet, I feel the comfort of living in this city, The Hague, where, in 2021, only 43.8% of its habitants were Dutch natives[6]. The city where I live is diverse, the house where I live is diverse, my housemates are Italian, French, Croatian, Belgian and Swiss, which might not be extremely diverse cultures, but yet we all have a different meal to prepare on someone's birthday and a different way to say goodnight before going to sleep.

When I started this thesis in September 2021, I wanted to investigate how public spaces play a role in community building within the habitants of a neighbourhood. I immediately discovered that in my neighbourhood, Regentessekwartier, there was a strong sense of community: lots of activities organised around the main streets and squares, a few associations aiming at improving the quality of shops and streets. Yet, I kept asking myself: "why do I not feel this sense of community? Why am I not part of this community?".

I feel we - as my generation of people - are moving towards a society that will deal more and more with the concepts of "outsiders" and we will need to learn and to deal with issues like diversity, inclusion, etc. which I believe the cities where we live in are not prepared yet. My private and social sphere is diverse, yet the public sphere of the city where I live is not.

With this thesis I investigate the city I live in, striving for a place where my private-social sphere can complement my public-physical sphere. What I am aiming at it's to find or design places in the city where I can identify with the feeling of 'belonging'.

6 Den Haag in Cijfers, "Bevolking, gemeente Den Haag" - [Online] Available: https://denhaag.incijfers.nl/dashboard/Overzichten/Bevolking/ [Last visit: February 2022]

Intro

According to the United Nations Educational, Scientific and Cultural Organization (UNESCO) “a public space refers to an area or place that is open and accessible to all peoples, regardless of gender, race, ethnicity, age or socio-economic level.”[7] We often identify public spaces with gathering spaces, such as plazas, squares and parks; but also with connecting spaces, such as sidewalks and streets.[8]

When considering public spaces as places reachable by all citizens of a city, it could happen that place follows function.
As stated by Hannah Arendt, in fact, the essential aspect of public life lies in its plurality and how it reveals differences in perspectives and experiences of the world.[9] “Being seen and being heard by others derive their significance from the fact that everybody sees and hears from a different position.This is the meaning of public life. [...] Only where things can be seen by many in a variety of aspects without changing their identity, so that those who are gathered around them know they see sameness in utter diversity, can worldly reality truly and reliably appear.”[10] It is exactly in the public realm, that “we encounter the proverbial “other” and where we must relate to other behaviour, other ideas and other preferences.[...] The public realm is ‘the sphere of social relations going beyond our own circle of friendships, and of family and professionals relations. The idea of the public realm is bound up with the ideas of expanding one’s mental horizons of experiment, adventure, discovery, surprise.”[11] When we step out from our domestic and private domain, to access and inhabit the public domain, we are exposed to the unfamiliar world. Differently from the comfort of the private, “in public spaces we are exposed to “other” ways of seeing, experiencing, living, etc. and it is “in confrontation with other opinions that we develop our own ideas, [...] becoming aware of one’s own values and the decision to uphold these, or indeed to adapt them.”[12]

People started moving from the countryside to the cities because of the above mentioned characteristics and opportunity. First because cities had always been more acceptant, particularly to nonresidents or foreigners than villages[13], creating an atmosphere of belonging when

7 UNESCO, “Inclusion Through Access to Public Space” - [Online] Available: http://www.unesco.org/new/en/social-and-human-sciences/themes/urban-development/migrants-inclusion-in-cities/good-pra ctices/inclusion-through-access-to-public-space/ [Last visit: December 2021]

8 Ibid

9 H. Teerds, C. Grafe, C. Koekoek, “Four Themes for Architecture in The Writings of Hannah Arendt” in: OASE 107, Table Settings, Reflections on Architecture with Hannah Arendt (OASE foundation, Rotterdam, The Netherlands, 2020), p.19

10 Ibid

11 “Bianchini & Schwengel 1991, p. 229” in: M. Hajer, A. Reijndorp, “In search of new public domain” (NAi Publishers, Rotterdam, The Netherlands, 2001), p. 12

12 M. Hajer, A. Reijndorp, In search of new public domain (NAi Publishers, Rotterdam, The Netherlands, 2001), p. 12

13 D. Läpple, “Diversity of Urbanization Patterns in a Global World” in: T. Rieniets, J. Sigler, K. Christiaanse, “Open City, Designing Coexistence” (SUN, Amsterdam, The Netherlands, 2009), p. 51

feeling excluded in other realities, but also because the city was a place with an overwhelming and unprecedented supply and an equally differentiated demand, not only of goods, but also of experiences, impressions, and ideas.[14]
The problem arises when looking at the 'City of Today'. The 'City of Today' is a diverse city - socially, culturally, economically and politically, yet, there is an urban fragmentation that characterises it. "Spatial, functional and social, segregation threatens to produce an archipelago of separated islands [...] whereby communication - and thus cultural exchange, innovation and productive interaction - between one part of the city and another are hindered."[15] We create and live within 'borders'

Richard Sennett, urbanist and sociologist, reflects on the issue of segregation and identifies two conditions of edge when dealing with fragmentation. The first, a boundary, a place meant to mark a territory where interaction ends, diminishes[16]; the second, a border, a place where interaction between different species increases[17]. He states that we as designers, urbanists, architects, should focus on the border and work on increasing those interactions.

To research and to define concepts like segregation and borders, the theoretical framework is placed in the reality of the city I live in: The Hague. Since its very foundation, it is characterised by a division and segregation which still today affects the residents. It was built from the beginning as the retreat for nobles in their countryside houses, and later on the city grew by separating, through a main street, the rich class, on the right, from the working class, on the left. In the years the city developed, on the sand and the clay myth. Good houses were built on sand, which attracted the higher class, and bad houses were built on clay, or better called peat, which left space for the lower class. Within The Hague, to investigate and question the definition of border, the one taken in consideration is Regentessekwartier, a neighbourhood located on the southwestern side of the centre of The Hague. This area lies between native dutch residents and moroccan families, within french bakeries and and islamic butchers. The diversity of activities and habitants from the adjacent sides of the neighbourhood results in Regentessekwartier as the neighbourhood in-between, acting as a plausible space of encounter within diverse groups.

14 A. Reijndorp, "The City as Bazaar" in: T. Rieniets, J. Sigler, K. Christiaanse, "Open City, Designing Coexistence" (SUN, Amsterdam, The Netherlands, 2009), p. 93

15 K. Christiaanse, "The Open City and Its Enemies" in: T. Rieniets, J. Sigler, K. Christiaanse, "Open City, Designing Coexistence" (SUN, Amsterdam, The Netherlands, 2009), p. 29

16 Harvard GSD, "The Architecture of Cooperation - Richard Sennett", (2012), [Online]. Available: https://www.youtube.com/watch?v=tcXE4NEgLn8 [Last visit: November 2021]

17 Ibid

Within Regentessekwartier, Regentesselaan is the street analysed. It crosses the neighbourhood from north to south and it is defined as the nuance, the street where changes are visible, from inhabitants, to buildings, to facilities and public areas. Through my personal lense as a designer and as an foreign inhabitant of the street - not dutch native - but living in the central square - I tried to define the architectural elements along the public street that mark that division and that prevent me from accessing or feeling welcome within 'others'.

This first step of the final aim is to delineate the characteristics that can construct a space along the borders where the habitants of the city of today can identify with the feeling of 'belonging' in the 'City of Tomorrow'.

In this thesis, there might be many questions with very little answers. I try to answer those questions by taking myself as the only 'other' of this city. The reflections, the analyzes and the experience of the street of Regentesselaan is performed throughout my personal view. What I wish for this thesis is to open up a discussion, a reflection for the citizens of the 'City of Today'. And hopefully, collectively in the next phase, finding an answer, and possibly multiple answers.

How can borders - identified in the public domain, the streets we live in - act as places of coexistence within diverse communities, where citizens can encounter the "other"?

What are the characteristics of a border?

What are the elements - physical and atmospheric - that define those borders?

What is my relation to those borders and why do they act as borders for me? What do they separate myself from?

"So how do we respond to our collective anxiety today? Either we 'bridge', reaching across to other groups and towards our inherent, shared humanity and connection, while recognising that we have differences; or we 'break', pulling away from other groups and making it easier to tell and believe false stories of 'us vs them', then supporting practices that dehumanise the 'them'."[18]

18 The Guardian, John A Powell, "Us vs them: the sinister techniques of 'Othering' – and how to avoid them" (2017) [Online]. Available: https://www.theguardian.com/inequality/2017/nov/08/us-vs-them-the-sinister-techniques-of-othering-and-how-to-avoid-them [Last visit: February 2022]

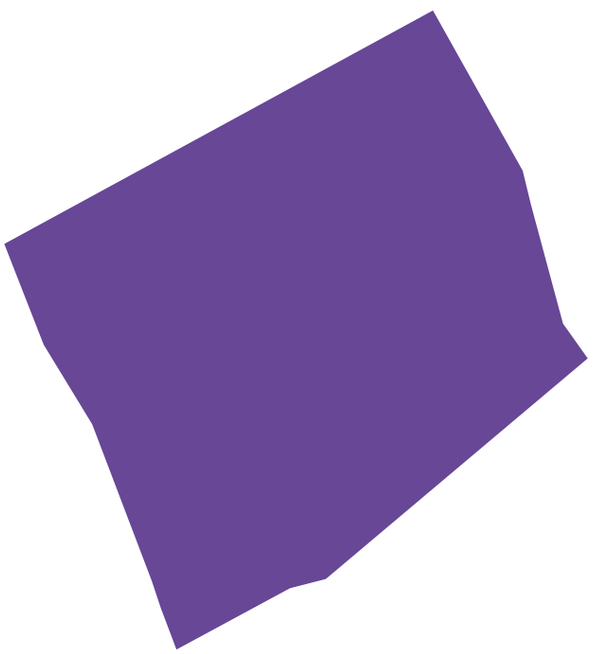

Contextualising Borders

Segregation
Noun
1 the act or policy of separating people from different groups, for example people of different races, religions or sexes, and treating them in a different way[19]

Integration
Noun
1 the act or process of combining two or more things so that they work together[20]
2 the act or process of mixing people who have previously been separated, usually because of colour, race, religion, etc.[21]

Integrate
Verb
1 to become or make somebody become accepted as a member of a social group, especially when they come from a different culture[22]

Gentrification
Noun
1 the process of improving an area of a town or city so that it attracts people of a higher social class than before[23]

Urban Blight
Noun
1 The degeneration of a landscape or urban area as a result of neglect[24]

Closed City
Noun
1 an over-determined, regimented, balanced, segregated, controlled, clarity and linear city[25]

19 Oxford Learner's Dictionaries, "Definition - Segregation" - [Online] Available: https://www.oxfordlearnersdictionaries.com/definition/english/segregation?q=segregation [Last visit: February 2022]

20 Oxford Learner's Dictionaries, "Definition - Integration" - [Online] Available: https://www.oxfordlearnersdictionaries.com/definition/english/integration?q=integration [Last visit: February 2022]

21 Ibid

22 Oxford Learner's Dictionaries, "Definition - Integrate" - [Online] Available: https://www.oxfordlearnersdictionaries.com/definition/english/integrate?q=integrate [Last visit: February 2022]

23 Oxford Learner's Dictionaries, "Definition - Gentrification" - [Online] Available: https://www.oxfordlearnersdictionaries.com/definition/english/gentrification?q=gentrification [Last visit: February 2022]

24 Quora, "What is the opposite of gentrification?" - [Online] Available: https://www.quora.com/What-is-the-opposite-of-gentrification#:~:text=There%20is%20probably%20no%20simple,be%20appropriate%20in%20some%20circumstances. [Last Visit: February 2022]

25 Urban Springtime, "The Open City" - [Online] Available: https://urbanspringtime.blogspot.com/2018/03/the-open-city.html [Last Visit: February 2022]

The City of Today

"At around the turn of the eighteenth century, the world was almost exclusively rural. According to estimates, only two to three percent of the world's population lived in cities at that time.[26] In the Netherlands urbanisation occurred early: by the eighteenth century 80% of the population already lived in urban areas.[27]

People started moving from the countryside to the cities because of different interests. First because cities had always been more acceptant, particularly to nonresidents or foreigners than villages,[28] creating an atmosphere of belonging when feeling excluded in other realities. But most important, because people saw the city as a place of exchange, of culture, knowledge, experience, and news. It was a place with an overwhelming and unprecedented supply and an equally differentiated demand, not only of goods, but also of experiences, impressions, and ideas.[29]

The reality is that the beautiful vision of the city as a place of exchange came across difficulties. "The increasing density of multiracial, cultural, ethnic, and social identities led not to a cheerful, entropic soup in which everything was mixed together."[30] Richard Sennett refers to such a separate city as being a "Closed City". With 'closed' he means "over-determined, regimented, balanced, segregated, controlled, clarity and linear".[31] Cities were built following functionality, resulting in repetition, regularity, symmetry, straight lines etc. and top-down principles. Despite good intentions aimed at population growth and traffic problems, the results created 'mono-fuctional' cities, where economy and mobility were the prime concern of city planning and not the habitants.[32]

Today, the city remains a diverse city - socially, culturally, economically and politically, but as a consequence to functionality, there is an urban fragmentation. "Spatial, functional and social, segregation threatens to produce an archipelago of separated islands [...] whereby communication - and thus cultural exchange, innovation and productive interaction - between one part of the city and another are hindered."[33]

26 Eisinger, "The Open City and Its Historical Context" in: Eis T. Rieniets, J. Sigler, K. Christiaanse, "Open City, Designing Coexistence" (SUN, Amsterdam, The Netherlands, 2009), p. 39

27 J. Gehl, L.J. Kaefer, S. Reigstad, "Close Encounters with Buildings" in: H. Karssenberg, J. Laven, M. Glaser, M. van 't Hoff, "The City at Eye Level" (Eburon Academic Publishers. Delft, the Netherlands, 2016), p. 29

28 D. Läpple, "Diversity of Urbanization Patterns in a Global World" in: T. Rieniets, J. Sigler, K. Christiaanse, "Open City, Designing Coexistence" (SUN, Amsterdam, The Netherlands, 2009), p. 51

29 A. Reijndorp, "The City as Bazaar" in: T. Rieniets, J. Sigler, K. Christiaanse, "Open City, Designing Coexistence" (SUN, Amsterdam, The Netherlands, 2009), p. 93

30 K. Christiaanse, "The Open City and Its Enemies" in: T. Rieniets, J. Sigler, K. Christiaanse, "Open City, Designing Coexistence" (SUN, Amsterdam, The Netherlands, 2009), p. 26

31 Urban Springtime, "The Open City" - [Online] Available: https://urbanspringtime.blogspot.com/2018/03/the-open-city.html [Last Visit: February 2022]

32 Ibid

33 K. Christiaanse, "The Open City and Its Enemies" in: T. Rieniets, J. Sigler, K. Christiaanse, "Open City, Designing Coexistence" (SUN, Amsterdam, The Netherlands, 2009), p. 29

What happens is that "a diverse and heterogene part of town can fall victim to the process of segregation either by exodus of the middle class, slipping into a negative spiral, leaving only the poor behind, or being too attractive and becoming a victim of its own success, leading to a process of gentrification and a reduction in diversity."[34] "Gentrification is a process that can generally improve a neighbourhood's physical condition and its place in the private market, but in doing so, does not really take the current inhabitants into account. Gentrifiers create this imaginary sense of neighbourhood and neighbourhood relations that actually help satisfy new consumption habits of the higher income classes".[35]

34 K. Christiaanse, "The Open City and Its Enemies" in: T. Rieniets, J. Sigler, K. Christiaanse, "Open City, Designing Coexistence" (SUN, Amsterdam, The Netherlands, 2009), p. 35

35 A. Can, "Galata, Istanbul: Understanding Conflict and Tension in a Gemtrifying Neighbourhood" in: M. Besters, R. Marrades, J. Kahne, "Our City? Countering Exclusion in Public Space" (STIPO Publishing, 2019), p. 38

The Hague

The Hague, the city where I live in today and where the research of this thesis takes place, has a long history marked by segregation.

Since the very foundations, it was built in two blocks. On one side the nobility started building their residential places around the Ridderzaal - the oldest buildings in the Parliament. “People who wanted to live near the castle or who worked for the count. In the first place they were noblemen or members of the gentry. They had their castles in the country, but also wanted a stately house near the court. Their houses looked like castles, with walls and merlons, but they did not have a military function. They were meant to impress the importance of the owner of the house. Large houses were built everywhere in The Hague, but especially in the area near the Gevangenpoort, which was the main entrance to the castle.”[36] On the other side, most common people settled in the area around the Groenmarkt. There a village started to grow with a population of innkeepers, farmers and artisans.[37] “The blueprint of the village and future city of The Hague was already formed: two (then literally) separated areas, one for the privileged and one for common people. Two communities depending upon each other but living in separate realities.”[38]

It’s not only how social classes separated themselves, but also how materiality separated social classes. There is the common myth that houses in The Hague are either built on sand or on peat. The sand basements were good places to build: the ground was dry and solid and the soil layers were sometimes two metres higher than the peat. The peat, on the other side, was sometimes very swampy. So it happened that the “better-off mainly settled on the sand bars near the coast, whereas working class people were forced to build their houses and streets on the humid - and unhealthy - peat grounds between the sands and further inland.”[39]

Last, this division manifested itself in how people related to each other. There are two ways of naming the habitants of The Hague: the ‘hagenees’ and the ‘hagenaar’. Location in the past the notion of the two worlds, they are related to the two distinct social classes of rich

36 Anemaa, “History of The Hague” [Online] Available: https://anemaa.home.xs4all.nl/history_the_hague/short_history_the_hague.htm [Last visit: February 2022]

37 Ibid

38 Edward van Os, THE STORY OF THE HAGUE: HOW TO COPE WITH DIVERSITY AND SEGREGATION?, History of Segregation - https://multinclude.eu/2019/11/28/the-story-of-the-hague/ [October 2021]

39 Ibid

and poor: the ‘hagenaar’ were the rich class, and the ‘hagenees’ the working class. Today this distinction partly exists, but it’s more related to being born in the city or moving into the city.[40]

The notion of segregation belonging to The Hague, today is almost like an ‘urban myth’: everyone knows, but no one talks about it. At the beginning of this research, I was looking for a sense of community associated with this city, although, in one of my first interviews with the local habitants, while explaining my starting point back then, she immediately referred to The Hague as the most segregated city in the Netherlands.

Where does the segregation that much identify with the city I live in, especially in its history, display itself today?

40 In De Buurt, “Ben je een Hagenaar of Hagenees? Wij zoeken het uit” [Online] Available: https://indebuurt.nl/denhaag/genieten-van/mysteries/ben-je-een-hagenaar-of-hagenees-wij-zoek-en-het-uit~78426/ [Last Visit: February 2022]

strandwal
veen
KIJKDUIN
DEN HAAG
SCHEVENINGEN
WOUBRUGG
2,5 km

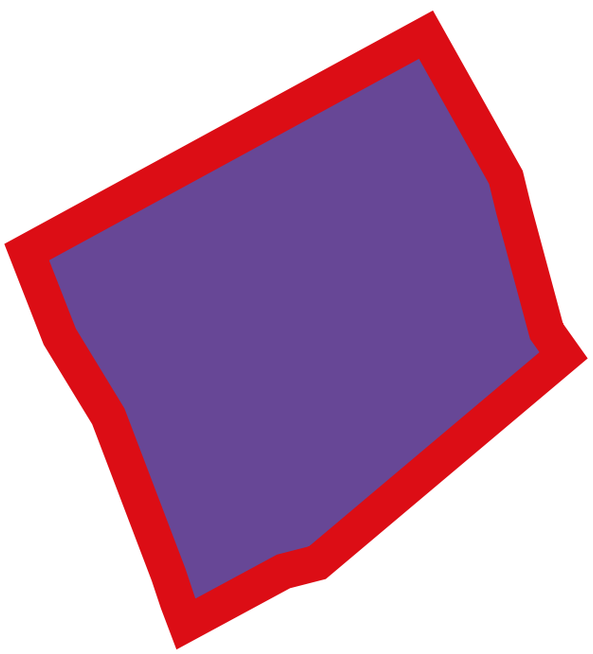

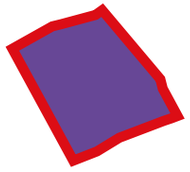

Defining Borders

Boundary
Noun
1 a place meant to mark a territory where interaction ends, diminishes[41]

Border
Noun
1 a place where interaction between different species increases[42]

41 Harvard GSD, “The Architecture of Cooperation - Richard Sennett”, (2012), [Online]. Available: https://www.youtube.com/watch?v=tcX-E4NEgLn8 [November 2021]

42 Ibid

The Edge Condition

According to Richard Sennett the concept of segregation, and more generally a condition of separation in cities, is marked by two possible physical conditions: borders and boundaries. While borders are permeable and thereby passable, boundaries are physical obstacles to prevent user flow.[43]
He gives the example of the cell wall and cell membrane. A cell wall is a rigid structure that acts as a container, while a cell membrane is an edge which is more flexible, more open. Biologically, many edges in cells can switch from wall condition to the membrane condition. Some membranes are both pores and resistance and work out the balance within the two dynamics.[44] Same analogy, he describes the distinction between ecological borders and ecological boundaries. An ecological border is something where at the edge there is more intense activity between different groups. At the boundary there is less activity.[45] Looking at the city reality, we could identify a boundary with a wall, a fence, a highway, while a border would belong more to the idea of crossing a road and stepping into a neighbourhood where you don't feel entitled to. Boundaries are physical limits, such as territorial demarcations, natural features, spatial separation. Borders instead, can transcend the physical and range from social, political, to racial limits.[46]

Following the two conditions described by the sociologist Richard Sennett, in this project I am interested in following his call to designers, architects, urbanists, into focusing on making more borders and less boundaries in the city.[47] It is exactly on those borders places that there is the "spatial precondition for social interaction that involves cooperation between people that differs."[48]

When dealing with borders though, it is important to not forget that those borders were created at first for their reasons. "People sort themselves for all sorts of reasons, most of them bening" states Interboro, an architecture practice studio by Tobias Armborst, Daniel D'Oca and Georgeen Theodore. "Like-minded clustering has indeed produced horrible, racially, exclusive communities whose legacy is unfortunately still felt, but it has also produced communities of gay retirees, multiple-chemical-sensitivity suffers, hipsters, and suburban Muslims."[49] Borders can have a positive effect on closed communities, so it's important to think of them as 'traspassable' rather than clear separation points from us to the others.

43 Cambridge Law Faculty, "The Edge: borders and boundaries", (2015), [Online], youtube.com/watch?v=1VM-9wqovghE&t=125s

44 Harvard GSD, "The Architecture of Cooperation - Richard Sennett", (2012), [Online]. Available: https://www.youtube.com/watch?v=tcX-E4NEgLn8 [November 2021]

45 GSD TAlks: Richard Sennett, "The Open City", (2017), [Online]. Available: https://www.youtube.com/watch?v=7PoRrVqJ-FQ [November 2021]

46 Daniels University of Toronto, "Selected Topics in Urban Design: Borders & Boundaries - Territoriality, Urban Settings, and Art as a Mediator" [Online] Available: https://www.daniels.utoronto.ca/selected-topics-urban-design-borders-boundaries-territoriality-urban-settings-and-art-mediator [Last visit: February 2022]

47 GSD TAlks: Richard Sennett, "The Open City", (2017), [Online]. Available: https://www.youtube.com/watch?v=7PoRrVqJ-FQ [November 2021]

48 Harvard GSD, "The Architecture of Cooperation - Richard Sennett", (2012), [Online]. Available: https://www.youtube.com/watch?v=tcX-E4NEgLn8 [November 2021]

49 Interboro, "Community: The American Way of Living" in: T. Rieniets, J. Sigler, K. Christiaanse, "Open City, Designing Coexistence" (SUN, Amsterdam, The Netherlands, 2009), p. 273

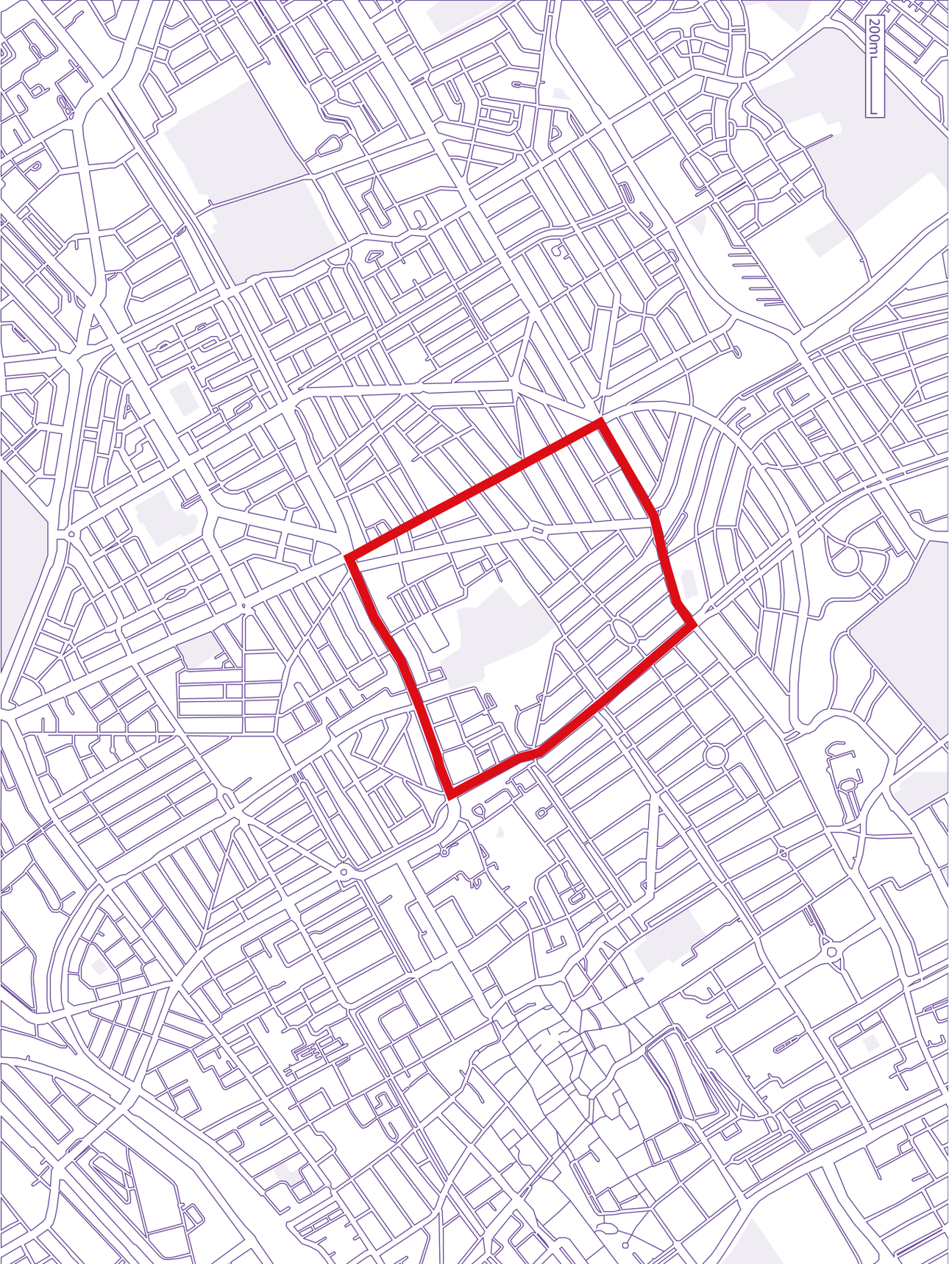

Regentessekwartier

When looking back at the history of the city, today the situation is less distinct, but The Hague remains one of the most segregated cities of the Netherlands. “Literally, the distance between the wealthiest and poorest is sometimes only a block. However, these neighbourhoods hardly interact; they form different worlds.”[50] In this research I try to analyse and define the neighbourhood I live in - Regentessekwartier - as *border*.

Regentessekwartier is located on the southwestern side of the centre. On the north edge, there is Laan van Meerdervoort is a street of The Hague and is 5.8 km long. It is the longest avenue in the Netherlands.[51] It forms the historical dividing line between the sandy soil and the peat soils, between the rich class and the lower class, between the original residents of the Hague and the ones that moved in. On the south edge, there is Loosduinseweg, which today better characterises the notion of division that had in the past Laan van Meerdervoort. For example, to cross this road it takes approximately 5 minutes: a light to cross the tram line, and two to cross the car lines.

On the north part there is neighbourhood Duinord, built on the sandy area and populated by higher class international families and dutch natives, the main streets welcome french bakeries and wine shops. On the south part there is Laakkwartier, mainly built on peat and occupied by mostly non-native dutch habitants, but a more diverse group. Islamic butchers and corner stores are part of the shops of this neighbourhood.

Regentessekwartier lies exactly between the two. Between the sand and peat division, it was built around 1900, from the canal - closer to the centre - and then it developed going further on the south-east side. “It was the time the town was growing fast” explains Aad van Schie[52], a resident of the neighbourhood. Today, there are around 1400 people living in this neighbourhood. 47.6% is Dutch, 2.9% is Turkish, 3.3% is Moroccan, 9.8% is Surinameese and 24% is other western countries.[53] Even if the process of gentrification is taking over in this part of town - in 2006 Regentessekwartier counted 50% Dutch, 3.8% Turkish, 3.9%

50 Edward van Os, THE STORY OF THE HAGUE: HOW TO COPE WITH DIVERSITY AND SEGREGATION?, The Hague in 2019 - https://multinclude.eu/2019/11/28/the-story-of-the-hague/ [October 2021]

51 Wikipedia, “Laan van Meerdervoort” [Online] Available: https://en.wikipedia.org/wiki/Laan_van_Meerdervoort [Last visit: February 2022]

52 Part of walk/interview with Aad van Schie, journalist of the local newspaper Konkreetnieuws, which “offers information from and about the Valkenbos and Regentessekwartier (ReVa) from the perspective of its residents”. Newspaper website: https://konkreetnieuws.nl/over-konkreetnieuws/

53 Den Haag in Cijfers, “Bevolking Den Haag - Migratieachterground” [Online] Available: https://denhaag.incijfers.nl/jive [last visit: February 2022]

Moroccan, 14.5% Surinaams and 15% other western countries[54] - "the interesting thing is that it's still a very diverse neighbourhood" states Aad van Schie.
"You have a completely different kind of habitants walking from beginning to end of the two main road" affirms, during our walk, Robert Schutte,[55] resident of Regentessekwartier and urbanist working in The Hague. For him, "Regentessekwartier is not as a whole anymore, it is actually a combination of fragments" and its different habitants lack in their interaction. "One of the usual effects of gentrification is that houses get occupied by people that are younger, richer, etc. and the whole combination of people changes, but also the public spaces change. Cafe Emma was one of the bars where everyone went there, whether you were middle class, high class or low class. There was always room there for everyone. I personally think that the gentrification effect that other sorts of people take over it's inevitable. The downside is that you start meeting less and less different kinds of people." explains Robert Schutte.[56]

Regentessekwaertier is inhabited by the diverse communities of the adjacent neighbourhoods and acts as a grey area, an in-between area, where the exchange within "others" is still possible because it is closed and communicating, as in borders.

54 Den Haag in Cijfers, "Bevolking Den Haag - Migratieachterground" [Online] Available: https://denhaag.incijfers.nl/jive [last visit: February 2022]

55 Part of walk/interview with Robert Schutte, urbanist based in The Hague and resident of Regetenssekwartier since he was born. Practice website: http://ruimtebeeld.nl/SenR.html

56 Ibid

POPULATION
Number of residents 2021
Scale
200m
Legend
< 8000
8000 < 10000
10000 < 12000
12000 < 14000
>= 14000
POPULATION
Age btw 0-19 years old (2021)
Scale
200m
Legend
< 2000
2000 < 4000
4000 < 6000
6000 < 8000
>= 8000

POPULATION
Age btw 20-64 years old (2021)
Scale
200m
Legend
< 2000
2000 < 4000
4000 < 6000
6000 < 8000
>= 8000

POPULATION
Age >= 65 years old (2021)
Scale
200m
Legend
< 2000
2000 < 4000
4000 < 6000
6000 < 8000
>= 8000

POPULATION
Native (2021)
Scale
200m
Legend
< 1500
1500 < 3000
3000 < 4500
4500 < 6000
>= 6000
POPULATION
Turkish (2021)
Scale
200m
Legend
< 800
800 < 1600
1600 < 2400
2400 < 3200
>= 3200

POPULATION
Moroccan (2021)
Scale
200m
Legend
< 450
450 < 900
900 < 1350
1350 < 1800
>= 1800
POPULATION
Surinamese (2021)
Scale
200m
Legend
< 700
700 < 1400
1400 < 2100
2100 < 2800
>= 2800

POPULATION
Antillean (2021)
Scale
200m
Legend
< 60
60 < 120
120 < 180
180 < 240
>= 240
POPULATION
Other non-Western
minorities(2021)
Scale
200m
Legend
< 350
350 < 700
700 < 1050
1050 < 1400
>= 1400

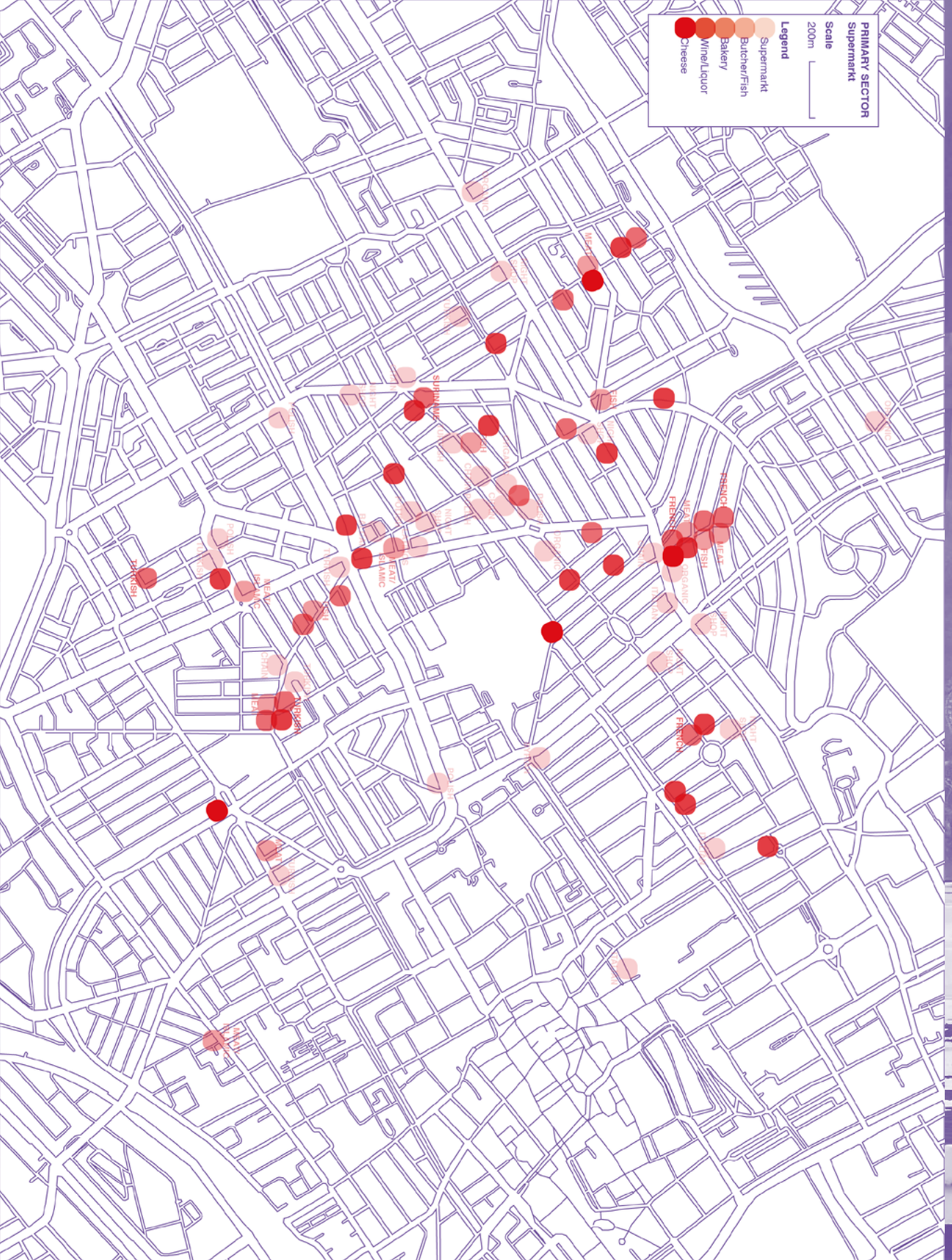
PRIMARY SECTOR
Supermarkt
Scale
200m
Legend
Supermarkt
Butcher/Fish
Bakery
Wine/Liquor
Cheese

33

976 ½ 990
990

1006
1002
998
994
990

SAB

1886 - 2006
Woruit II
13
13
1886 - 2006
Woruit II
11
11

noodutgang vrijlaten

RUSH
RUSH
RUSH
RUSH KEK

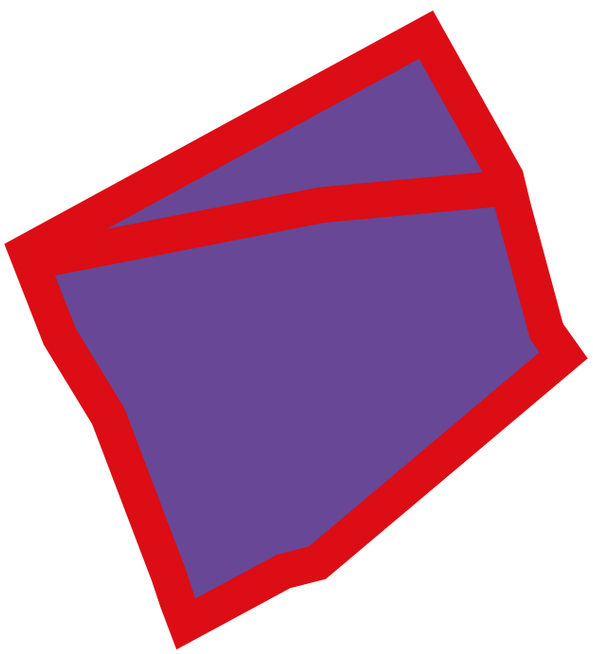

Analysing Borders

The Street

In order to study and find the elements that define a border, and eventually find spaces, objects, actions that can characterise my design for a space of encounter, my research moved from the neighbourhood scale to the street scale, the one I experience.

According to Jane Jacobs, activist and major influencer in urban studies related to public space, “streets and their sidewalks are the main public places of a city, its most vital organs.”[57] “They serve many purposes besides carrying vehicles, and city sidewalks the pedestrian parts of the streets serve many purposes besides carrying pedestrians. A city sidewalk by itself is nothing. It is an abstraction. It means something only in conjunction with the buildings and other uses that border it”[58] she writes.
If a neighbourhood has limited sidewalk space, this will have an influence on the interaction within people, because residents are in the situation to be able to avoid contact with strangers, even more with those of different income, race, or educational background. “Word does not move around where public characters and sidewalk life are lacking.”[59]

Looking at dutch cities, “about 80% of informal contact between neighbourhood residents occurs in hybrid zones - the transition area from public to private space”. This zone, when claimed, allows for an interaction with ‘others’, which doesn’t need to be physical, but rather provokes the passers-by and the neighbours to judge, relate or identify with each other.[60]
“Local residents have their own methods of laying claim to the space; they make their presence known through high buildings, tables and chairs on the sidewalks, through color, light effects, or advertisements. Yet, passersby can play in this competition as well: by generating noise or playing loud music they can increase their share in the acoustic space, with perfume, their share in the olfactory space, and with graffiti their visual reach. Moving very fast or very slow, or with a rolling,

57 J. Jacobs, “The Death and Life of Great American Cities” (Random House, New York 1961)p. 29

58 Ibid

59 Ibid p. 69

60 S. van der Ham, E. van Ulden, “Hybrid Zones Make Streets Personal” in: H. Karssenberg, J. Laven, M. Glaser, M. van ‘t Hoff, “The City at Eye Level” (Eburon Academic Publishers. Delft, the Netherlands, 2016), p. 144

space-consuming gait, an individual can limit other people's mobility, or repel them with an unpleasant odor or through littering. A person can strip a space of its public character, for example by destroying park benches, or make it unsafe for others, be it through walking seemingly or actually dangerous dogs, through drug dealing, or violence."[61]

61 B. Schneider, "Public Space - A Question of Structures" in: B. Hoidn "DEMO:POLIS - The Right to Public Space" (Akademie der Künste, Berlin, 2016) p. 65

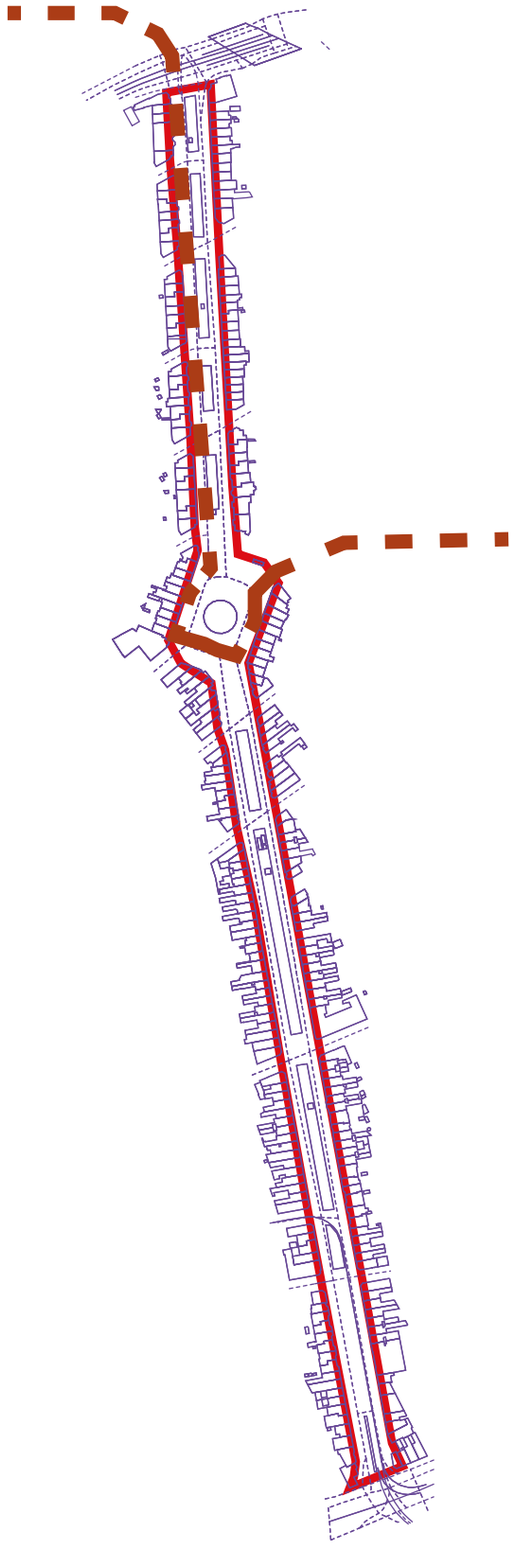

Regentesselaan

Regentesselan is the street that crosses the neighbourhood from the north part to the south part. It is the transition street, a nuance of buildings, shops, facilities, occupations and habitants. While walking Regentesselaan I started asking myself the following questions: “What are the elements - physical and atmospheric, such as objects and spaces - characterising the street, that preclude me from interacting with or being exposed to others?” and “Do these elements change walking from beginning to end? If so, how?”. I tried to understand how this street works. I questioned who lives there by collecting the elements that describe its inhabitants.

Starting from the north side of Regentesselaan, sidewalks are spacious. Most doors, and facades, have an entry space, which often is decorated with greenery either in pots or planted in the sidewalk itself. Doors are freshly varnished, glass decorations often appear on the upper part, and sometimes hanging on the front there is a metal pendant with a heartily shape. Everything is well taken care of, even the windows, with wooden structure and glass decorations, that frame the curtains, when shutted, or the interior of a space which most likely represents the one of a living room. The signs, characteristic of this pandemic, “we willen onze school terug” - we want our school back - that repeatedly are hung on windows, together with the traces of chalk on the sidewalk and the walls, suggested that most houses are owned by families.
The presence of shops is limited, counting only one pharmacy and one shop composed of a gas station outside, a bakery, and a laundromat in the back.
Between the roads, the middle of this side of Regentesselaan leaves space for cars and bikes. A sign for the ambassador private parking spot, a few charging stations for electric cars and occasionally a grass spot, carefully fenced by low metal bars, fill the parking areas. Even at pick hours, when people come back from work and kids come back from school, this part of the street is calm and almost absent. The only people you see are inside their homes.

Moving closer to Regentesseplein, the crossing point between the

division of Regentesselaan, the first bench appears, together with a few bars and shops belonging to the square, introducing a completely different reality.

While walking the southern part of Regentesselaan, the sidewalk gets smaller so does the space between the facade and the pavement, which on this side is replaced by a twenty-centimetre approx. piece of stone. The decorations slowly disappear, replaced by minimalistic doors; what does increase is the tags of house numbers, sometimes even 5 different ones for one building. The bells, often equal in numbers with the house number, are accompanied with the sign 'defected'.
All these elements suggest that the buildings are mainly rented, and probably by more than one household. There is less care taken in what we don't own. Yet, the presence of plants and pots in front of some houses suggests a different occupation or a wish for care. The windows, mostly in metal frame, are often covered by curtains, shutters or transparent foils, that hide the private space. When open, they leave space to look into rooms, where bedrooms and living rooms often belong to the same space.
More shops and dining places arise, counting a Chinese, a Surinamese and an Egyptian restaurant, and a few Turkish coffee places. A pharmacy, an aquarium shop and an antique glass shop, which connects us to the other side of the street, anticipate a islamic butcher and a mosque centre. All elements that call for a very diverse occupation, if I look back at where I started. The closer you get to the end, the more it becomes dirty, noisy, yet more alive. At 22:00, in the dark evening night, there are still a few people walking on the street. The road now adds space for a tram line, and the space between the roads leaves room for a small path for pedestrians, next to greenery areas, which differently than earlier are now not fenced, but rather reminiscent of a small community garden.

On one hand, comparing all these elements helped me to define the habitants and their transition within the border of Regentessekwartier, on the other they also allowed me to reflect on my experience of the street. There are three ways of understanding the street, that I identified: entering, moving and staying. These three categories consider spaces, objects, actions along the street that allow me, and in some cases forbid me, to get in 'contact' with others.

The first category "points of entry" takes into consideration all those elements that allow/deny an access to a space. They can be elements that allow physical entering, such as doors, fences, windows, or linked to the visual entering, such as curtains or light; in addition they can also be identified with communicational entering, such as bells and signs. A shut door, a closed curtain, a fenced window, they all communicate to me a clear cut between me and the other, me or the accessing of a space.

The elements that belong to the second category "points of moving" affect the act of walking, passing by. Sidewalks and roads are the most clear elements, but also a grass area which drives me to change path, a darker area compared to a bright and lighted one. A narrow sidewalk gives me the feeling of moving and passing by quickly, while a wide open sidewalk allows me to take my time. But the same influence will have a bright street or a dark one.

Third and last category, "points of staying" relates to all those elements that allow me to stay. A bench, a staircase to a door, a pole to lean on, they are all combined with actions such as leaning, sitting, laying, which change and influence the time I spend in the street.

We
willen
onze
school
terug.

GEEN FIETSEN VOOR HET RAAM!
Zie overkant een fietsen-stalling!
DANK u!

31
312
312 A
312 B
312 C
312 D

4

ZONE
P
Dagelijks
18.00-24.00 h

papier
IK
ZIE JE
KIJKEN
Valt
op hè?
Ook opvallen?
www.centercom.nl
of bel 0800-024 24 10

The Elements

Following part it is a way for the reader to walk Regentesselaan. I tried to photograph and extract the elements that had an influence on the way I experienced the street. A lot of elements are still missing and could be added, such as light, pillars, pavements. Others I might not be aware of, and might be essential for other people. Some elements, such as the door and the windows, contain other elements within itself, like curtains, stairs, decorations.

When going through the elements each reader will see them differently, and that's the freedom I want the reader to have. I suggest a categorization in points of entry, points of moving and points staying, but they are not set for everyone, they are my categorization. Only the order is set: from the beginning of Regentesselaan to the end of Regentesselaan.

The Elements *Points of Entry*
The Door

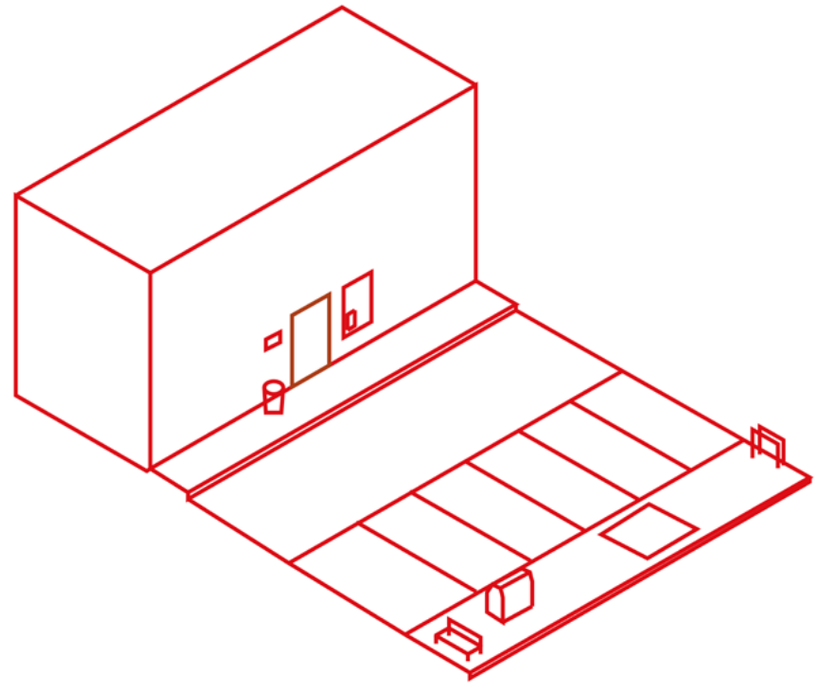

3

5

NEE
JA
JA

NEE
NEE

41

95

HADI

14

223

224

225

227 A B

228
A T/M E

NEE NEE

Bezorger bedankt!

134
136

NEE
NEE

NEE
NEE

W van der Meulen
157 A

201

234
236

287

NEE
NEE

303

312
312A
312B
312C
312D
NEE
NEE
NEE
NEE

313
MAXIMAAL 5
PERSONEN IN DE
SLAGERIJ
1 PERSOON PER
GEZIN/GROEP NAAR
BINNEN A.U.B. !!
MONDKAPJE
VERPLICHT
313

PINNEN
JA GRAAG

1897

333

356
Ingang

www.fysioconsult.nl
tel 070 30 000 41
Ingang
369

The Elements *Points of Entry*
The Window

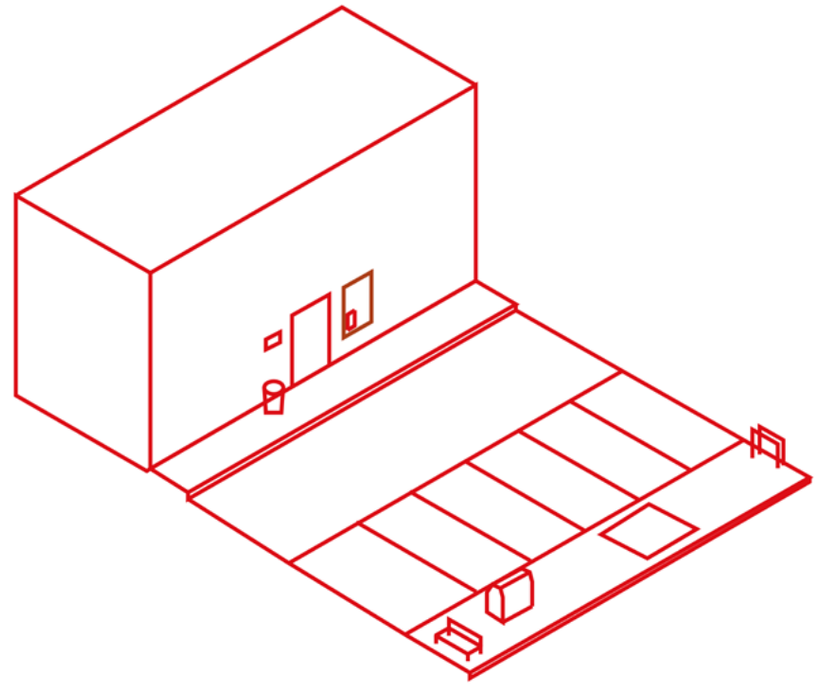

We willen onze school terug.

65A

Lionsclubs verzamelen
*Douwe Egberts Punten
*Oud en vreemd geld

casa
pia

BOXMORE

GRANDMA'S
PARKING
ONLY

TE KOOP
VERKOCHT
DE REGENTES
06 - 250 86 229

W van der Meulen
157 A II

VERBODEN
FIETSEN
TE PLAATSEN

KLIMAAT
MARS
OP STRAAT
VOOR EEN
KLIMAAT

The Elements *Points of Entry*
The Plant

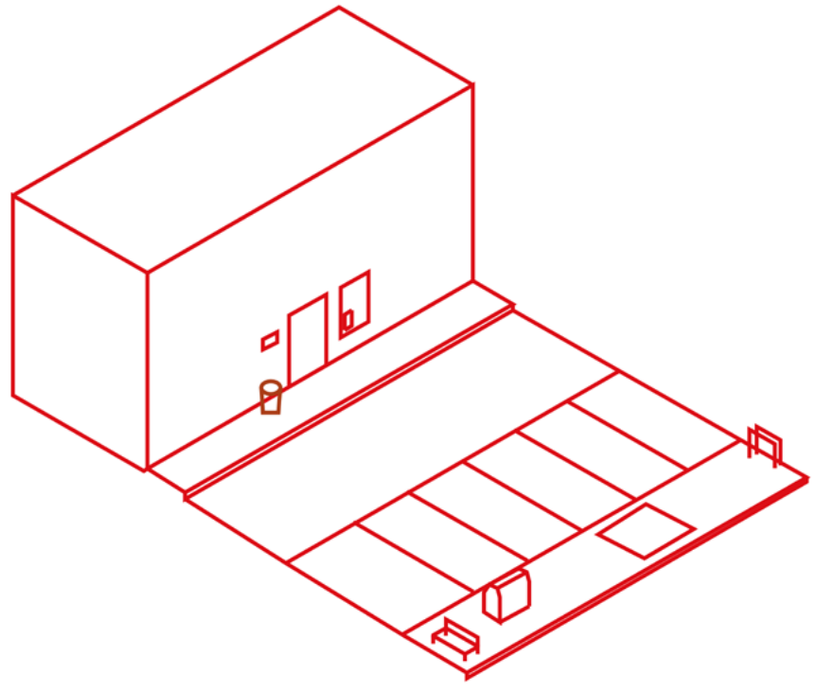

The Elements *Points of Entry*
The Sign

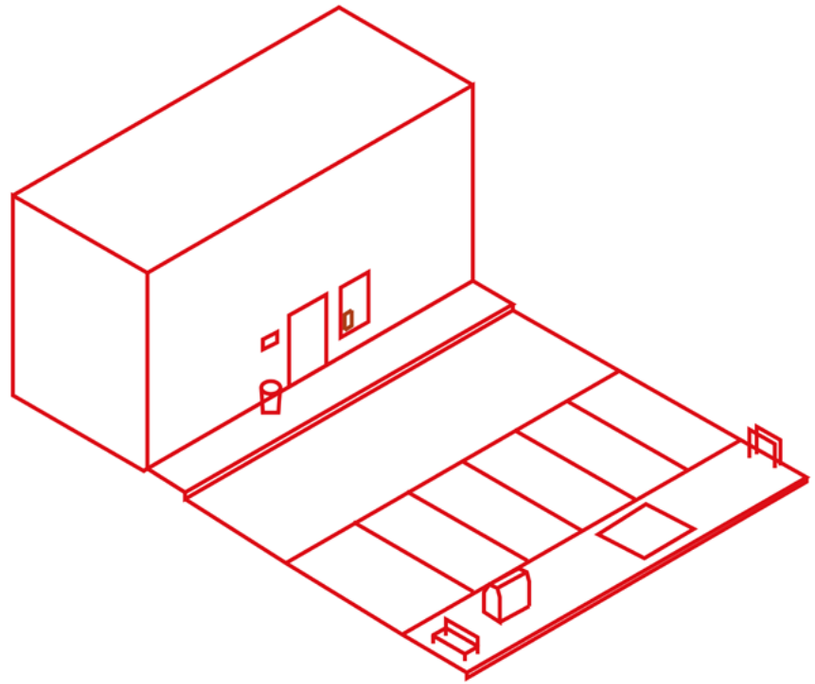

verisure
Active Alarm Technology
ALARMCENTRALE

verisure
Active Alarm Technology
beeldtransmissie
ALARMCENTRALE
Direct
Securitas Direct
Monitoring station
088 / 088 8 999

We willen onze school terug.
Doe ook mee! Kijk op www.galvanivooruit.nu

SINTeRK 1925
LiEVE!!!!!!!!

STA
OP
TEGEN
RACISME
ZWIJGEN IS GEEN OPTIE!

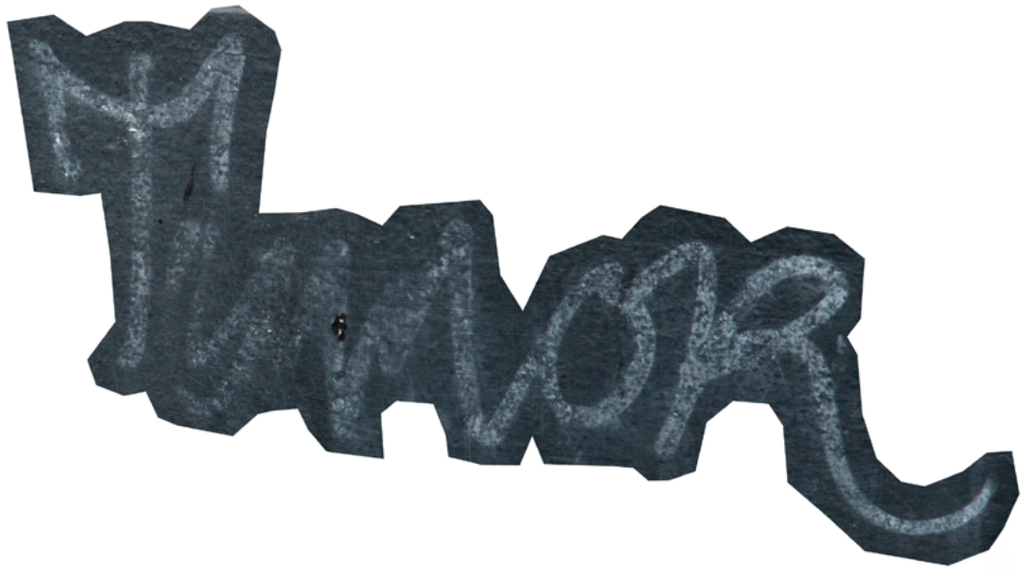

UTA KOCH

GRANDMA'S
PARKING
ONLY

dream
Post voor 157 A naar hiernaast !
Bestemd voor W van der Meulen !

W van der Meulen !
157 A !!

W van der Meulen !
157 A !

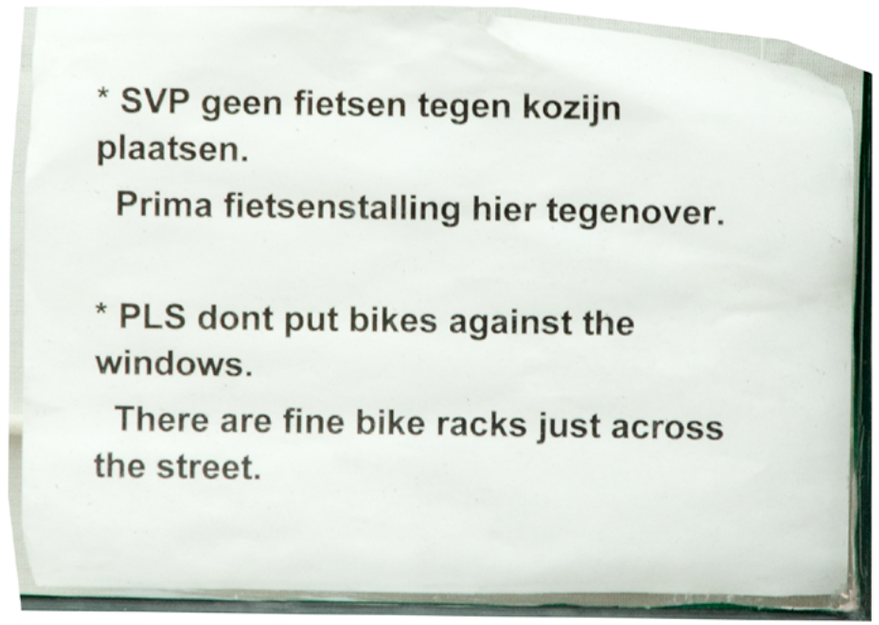
* SVP geen fietsen tegen kozijn plaatsen.
Prima fietsenstalling hier tegenover.
* PLS dont put bikes against the windows.
There are fine bike racks just across the street.

SHRI KESH HUISVESTING
&
ONROERENDE ZAKEN
TE HUUR
INSCHRIJFADRESSEN
VOOR MEER INFORMATIE
070-3964994
0653641791
SK HUISVESTING
&
ONROERENDE ZAKEN
REGENTESSELAAN 211
2562 CZ DEN HAAG
TEL.: (070) 3 56 49 94
FAX: (070) 4 27 54 44
VRAAGT TEN BEHOEVE VAN HAAR CLIËNTEN
KAMERS, STUDIO'S, ETAGES EN
APPARTEMENTEN VOOR HUUR EN VERHUUR.
ONZE KLANTENBESTAND BESTAAT UIT
STUDENTEN, PARTICULIEREN,
MEDEWERKERS VAN NATIONALE EN
INTERNATIONALE BEDRIJVEN.
WIJ ZORGEN VOOR DE JUISTE
HUURDER/VERHUURDER.
ZORGELOOS VERHUREN DOOR EEN
KWALITEITSBUREAU ZONDER KOSTEN
VOOR EIGENAREN.
VOOR AANBIEDINGEN EN INFORMATIE:
TEL. : (070) 3 56 49 94
MOBIEL : (06) 53 64 17 91
U KUNT UITERAARD OOK LANGS KOMEN.
U KUNT ONS OOK BELLEN VOOR UW VERHUIZINGEN.
-Kamers
-etages
-appartementen
te huur
gevraagd.

GEEN FIETSEN VOOR HET
RAAM!
Zie OVERKANT EEN FIETSEN-
STALLING!
DANK U!

HIER UW HOND
NIET UITLATEN!

BEL is kapot!
Graag Aandacht

MAXIMAAL 5
PERSONEN IN DE
SLAGERIJ
1 PERSOON PER
GEZIN/GROEP NAAR
BINNEN A.U.B. !!
MONDKAPJE
VERPLICHT

نداء
نرجوا من فضلكم عدم رمي
الخبز وتركه في الأرض، هذا
لا يليق وليس من اخلاق المسلمين
وشكراً لكم
* MEDEDELING
Wij VRAGEN U OM
GEEN BROOD OP
DE GROND ACHTER
TE LATEN.

HIER schrijven

bosal

GEEN
fietsen
plaatsen !

Kart kloppen,
anders bij buren
Rechts !!!
Post nL!

The Elements *Points of Entry*
The Bell

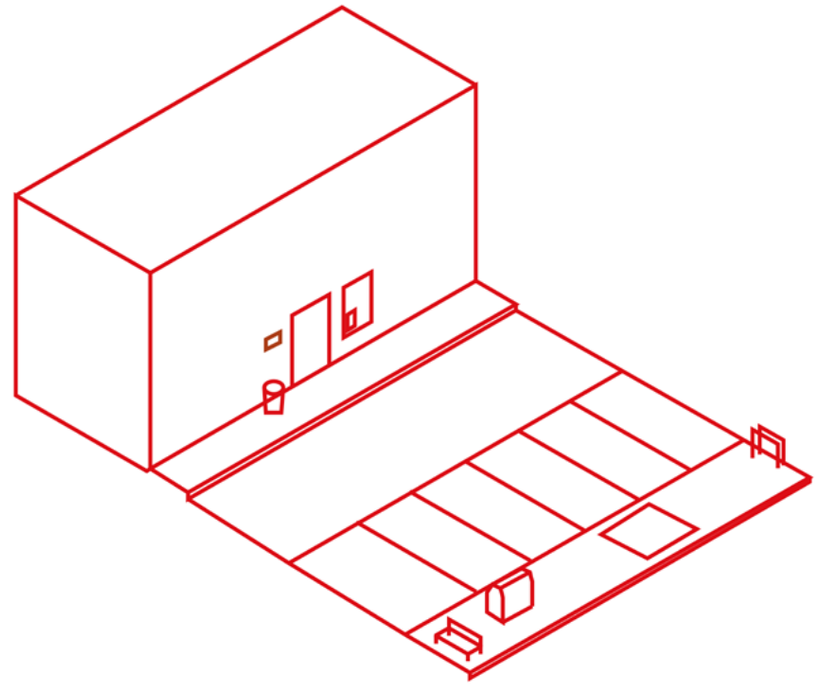

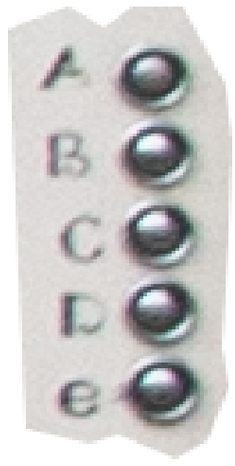
A
B
C
D
E

14

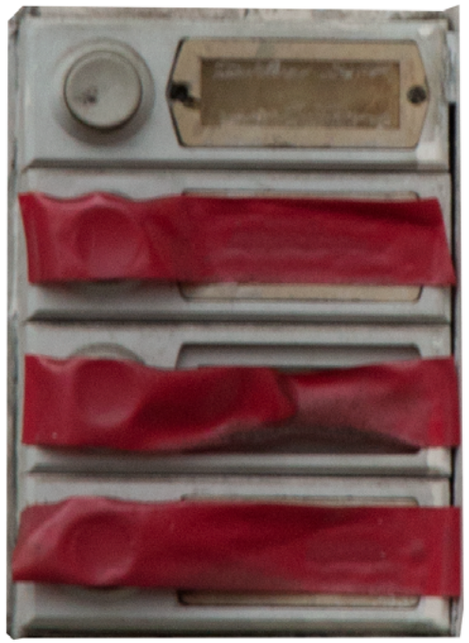

223
223

3e Etage

C
-B
28A
G

C
B

119

UTA KOCH

153C
153B
153A
153

Defect
160B
160A
160

LET OP!
DIT IS NIET
NR 163
161B
161E
161F
161D
161C
BEVEILIGD

175A

181

183
183A
183B
183C
183D
183E

187

B.G.
1 E.
2 E.

333A

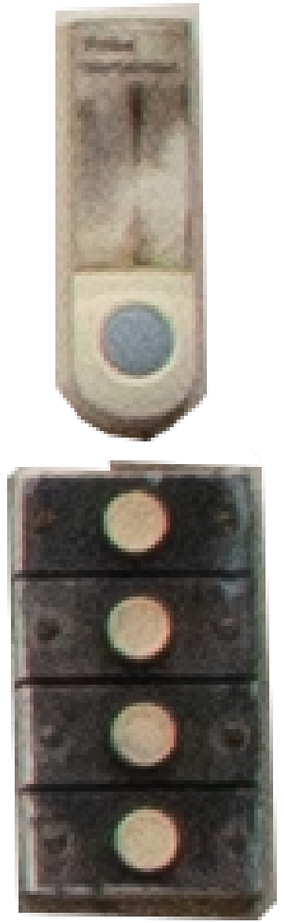

312A
CHACÓN
312c

The Elements *Points of Entry*
The Front Space

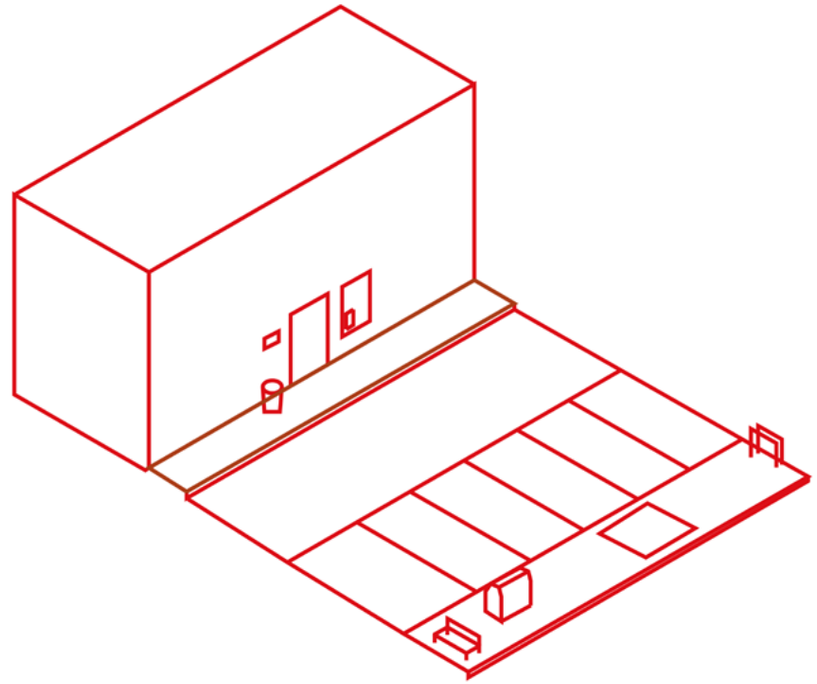

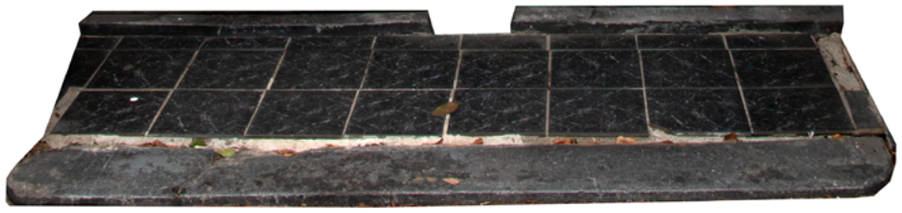

The Elements ***Points of Moving***
The Sidewalk

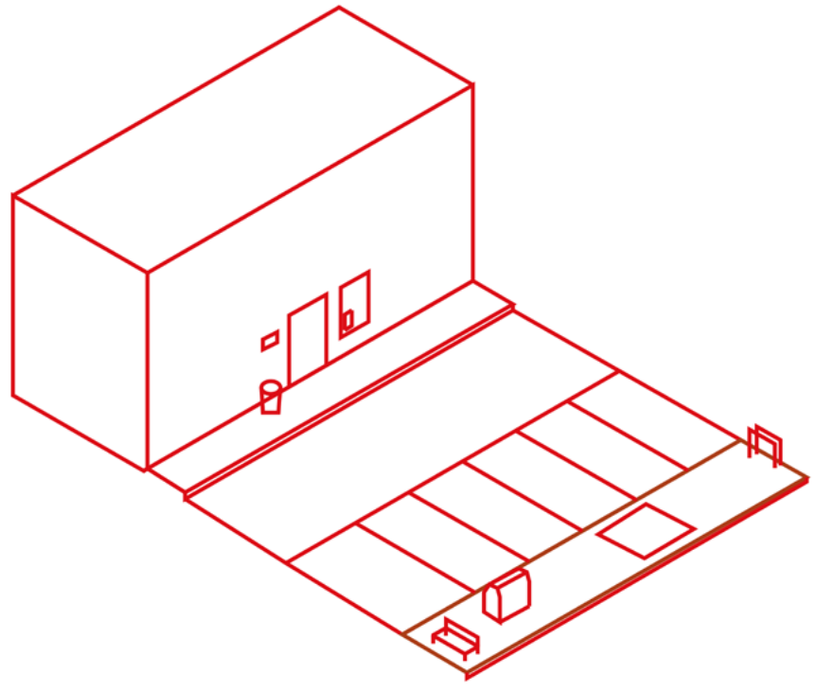

The Elements ***Points of Moving***
The Verge

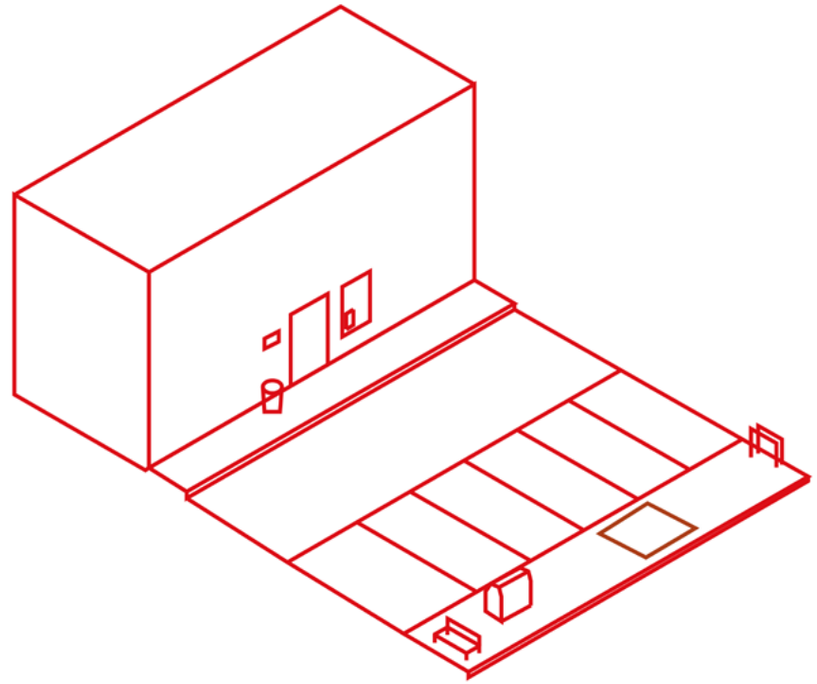

The Elements *Points of Staying*
The Bench

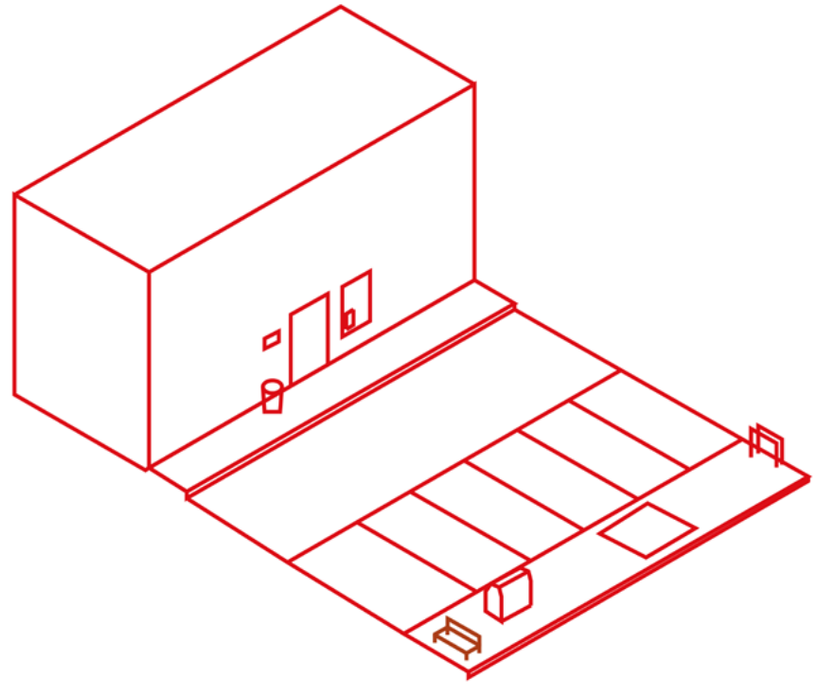

The Elements *Points of Staying*
The Parking Space

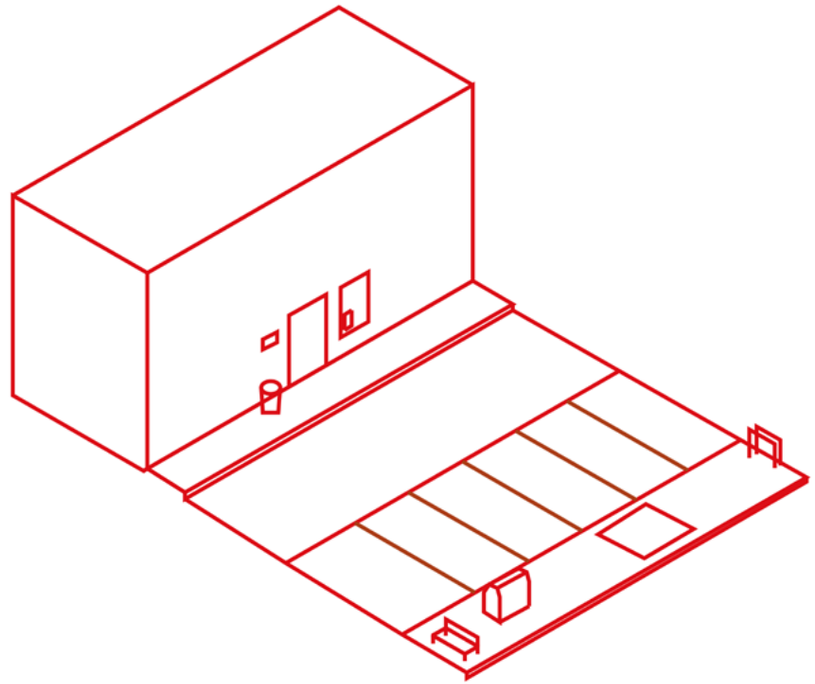

H-598-FL
36-LPN-1

The Elements *Points of Staying*
The Bike Parking

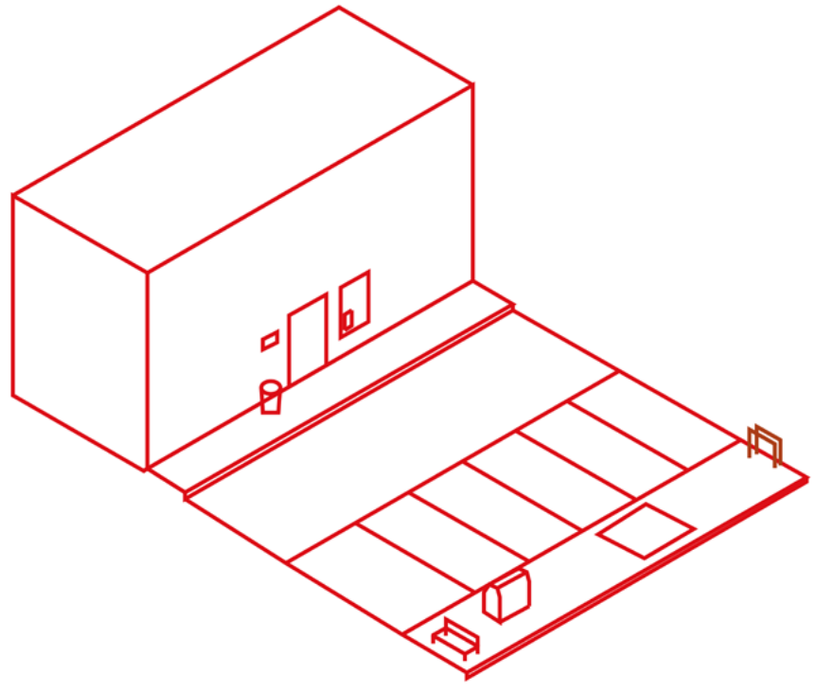

WE CAN
O BACK TO
RMAL
AUSE

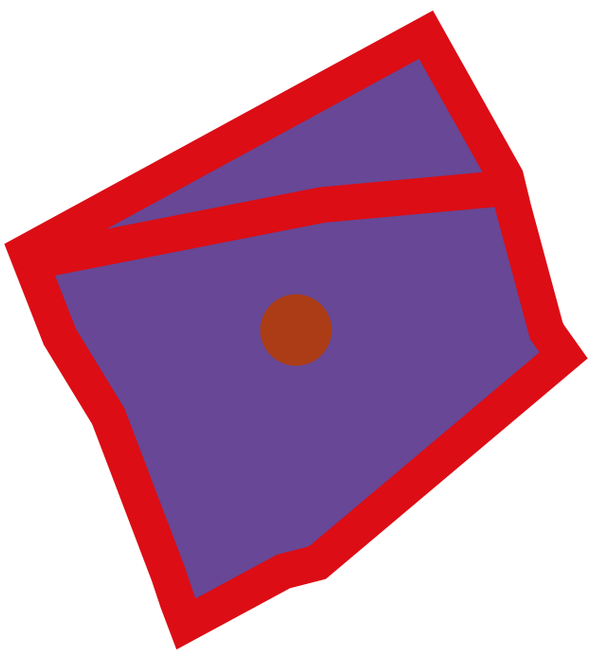

Designing with Borders

Open City
Noun
1 a system which is open socially to different voices who attend to one another, rather who each do their own thing in isolation. Striving for a city where many things happen at the street at the same time[62]

Stay
Verb
1 to continue to be in a particular place for a period of time without moving away[63]

Coexist
Verb
1 to exist together in the same place or at the same time, especially in a peaceful way[64]

62 Urban Springtime, “The Open City” - [Online] Available: https://urbanspringtime.blogspot.com/2018/03/the-open-city.html [Last Visit: February 2022]

63 Oxford Learner’s Dictionaries, “Definition - Stay” - [Online] Available: https://www.oxfordlearnersdictionaries.com/definition/english/stay_1 [Last visit: February 2022]

64 Oxford Learner’s Dictionaries, “Definition - Coexist” - [Online] Available: https://www.oxfordlearnersdictionaries.com/definition/english/coexist [Last visit: February 2022]

Space(s) and Time(s)

When reflecting on the elements of the previous chapter, it is important to focus on two points.
The first, being Regentesselaan, a street on two direction roads for cars, the street is divided into different paths for different use: a sidewalk, a bike path, a car road, and another sidewalk for people as in-between space. The walks analyse the two sidewalk areas: the area close to the buildings (A) and the area in between the two roads (B). The first one (A), is extremely influenced by the buildings surrounding and the people living in them. The sidewalk might be public, but it does feel extremely private. Everything happening there has an influence on the people living there. Very often during the walks, I felt uncomfortable if I did something different than just passing by: while taking pictures of windows and doors, I got stopped several times and asked to delete the pictures. My interaction with those "others" is defined by their choices towards communicating and allowing access to the outside, to "others". A shut door, a closed curtain, a dark room, preclude me from interacting with others and provoke a feeling of hostility that I can't change and won't feel entitled to change. This side of the street has few possibilities to be used as a ground for a possible design challenge, yet, if carefully studied and analysed it gives a lot of insights about the people who live there. A door with 6 doorbells of which most with the sign "defected" will probably tell us that the house is rented and divided by many people. A sign on the window for kids will probably tell us that in that house there are children.

On the contrary, the second area (B) feels mostly un-owned and most importantly unoccupied by the inhabitants of the street. This part is designed by the city-people, so the elements invite or preclude a certain kind of activity. A fenced grass will most likely remain untouched, while an open grass will possibly become ground for dogs. Benches will allow for sitting and enjoying the public space, a path will allow for a walk, etc. Even if this part is distant from the surrounding buildings, laying in between makes it easier to communicate with the surrounding buildings and people, without overstepping the privacy and personal space of habitants.

The second point to take into consideration is how the mapping occurred and how time has a huge influence on how we perceive the street.
Time can be considered in time of the day of the year. Walking the street at night, when a street is dark and quiet, gives you a completely different feeling than walking it at 8 o'clock in the morning when people are on their way to work. Some elements, such as lights, would be only visible at night; others linked to people's use, such as benches and front spaces, would be mostly visible after 18:00, when people come back from work. And again, walking the street in winter when it is rainy and foggy and people want to stay inside, has a totally different perception than walking the street in summer, when it's warm and people stay outside.

The other form of time I dealt with was linked to my personal time. During the first mapping, I would walk the street, so time is brief, short, and as a consequence has a brief impact on the space and the people. During my second mapping, I started taking pictures, which is not necessarily a slow action that requires time, yet it would allow me to give the time necessary for annoyed people to come out of their homes and come talk to me. During my third mapping, I took a stool with me and I sitted along different points in the sidewalk. Differently from taking pictures, which I understood as an act of overstepping their privacy, sitting as a researcher would give me the time to process and reflect on things surrounding me. It gave me the ability to move from space to place, from passing to staying, from accessing to owning.

While researching the elements I realised I wasn't looking for characteristics, but rather for an exact place and area along the street where I could feel entitled to enter, where I would feel a sense of ownership, and at the same time where there would be a possible communication with the other. I was constantly looking for a space that would give me a sense of belonging. What happened is that when I identified the space, the action of walking it, or crossing it wasn't enough, but I rather had to stop. Stopping through sitting gave me ownership, that stool among that grass was my spot, my area. It gave me the time to look into the eyes of the people passing by, to be considered, to be noticed. If it wasn't with words, the communication

was at least with eyes.

Tom Lois[65], dutch designer, in an interview from Pakhuis De Zwijger[66], a platform for social innovation and creation, discuss his most important tool for 'belonging':a foldable chair. By placing it in public spaces, outside in the street, in a period such as the pandemic, it gave him a way to feel at home also at the street level. Moving from inside, to the door, to the street and further outside, he was constantly questioning "do i still feel ok to sit here? Is it my street? What is mine, what is yours, am I intruding? It is a search for a homely feel into the public street." he states.[67]
Would then be a foldable chair, or many foldable chairs, the first elements to take with me, and place them in a space, for me identified with the space in-between, where we feel good, we feel entitled, represented, safe, at home? If public spaces are not only transitory spaces that connect us from home to work, to friends' houses, to the supermarket, but rather a space where we feel entitled to stay, would the gesture of sitting give us enough to start designing a space where we belong?

65 Tom Loois - http://www.tomloois.nl/

66 Pakhuis de Zwijger - https://dezwijger.nl/about-us-en

67 Pakhuis de Zwijger, "Designing Cities for All - Special: Making Sense of Belonging" [Online] Available: https://www.youtube.com/watch?v=O0ewmb9X-LF4&t=79s [Last visit: February 2022]

Conclusion and Objective

Segregation is a complex topic and hard to find a solution. In this thesis it tried to find a way to look at it. For me segregation goes along with diversity. If we segregate, we miss the chance to deal with something that we differ from. Differ might have a negative connotation, but being in contrast with something different, for me must have a positive outcome. What I missed in the City of Today was the possibility for me to encounter 'others', and this research allowed me to find a starting point: a place, the 'in-between', and an action, the 'staying'.

The elements of Regentesselaan I studied and took in consideration confirmed my view of The Hague as a segregated city. I always like to mention the two opposites of the square, on one side there is a bench and on the other side there are the trash bins. Obviously both sides come with a function, and as Jillian, my tutor, said in a feedback. "Maybe one side pays more taxes and then it's more maintained (benches and fenced green areas), while the other is more functional (no sitting areas, but trash bins and parking lots)." I understand function, but I don't understand inequality. When placing a bench on one side, and a trash bin on the other side, I see missing opportunities for the two sites, which influence and promote segregation in the street. Why can't both sides have benches and bins?

It is also true that I started this project thinking "I have to shape these borders in order for the habitants of the street to be able to mix and meet". But immediately after the first interviews in the bars, we, together with other students from INSIDE, understood that that was not the issue to tackle. To the question "would you like to have more opportunities to meet with the other habitants of the street?", people would answer "we don't want to mix", "we don't like that part" or "don't go there". Now, I do recognize that the problem is there, segregation comes with space and shows in society, creating a sense of hate and negativity. But I don't think creating a space where to force a mix and encounter would be an ideal solution. Rather my focus should be to create a space where all habitants of Regentesselaan feel welcome and can belong, and if all - yes it's a big goal I am setting for myself - can

access, then encounters might follow.
It is important that this transitory area, the space in-between, doesn't become a one-driven functional area, but rather an archipelago of areas, where each of us feels entitled to belong, within its own cultural aspect. "An approach which focuses on a mix of functions."[68]

In order to design on these borders areas, it is important that I put the focus on not erasing those borders, but rather find a space, a methodology that activates a communication between the habitants of those borders. For Emmanuel Levinas, a twentieth-century philosopher, the important thing is to keep the dash that separates I and thou. What he means is that there is an unbridgeable difference between people when they come together, and instead of uniting and integrating, they need to become neighbours to each other, being aware of one another intensely, but still remaining separated.[69] "That people can remain apart, and yet mutually aware and interactive."[70]
I want the inhabitants of my street to feel like they can belong in that space, because I do believe that people learn to feel 'at home' among their neighbours.[71] I want the people living on the south part of the Regentesselaan to feel welcomed in the north side of Regentesselaan, and vice-versa, because it is in the public sphere that they come into contact with different lifestyles and learn intercultural tolerance.[72]
"Feelings of safety, familiarity, being embedded in a community, as well as having a sense of control over one's own life, and a place of dwelling, are not only regarded as a prerequisite for well-functioning individuals, but also for self-supportive local communities, neighbourhoods, and cities."[73]

In the prologue of this thesis, I mention the sense of 'community' linked to Regentessekwartier, that I discovered during the first weeks of research. I haven't found that community yet, which would be my next step. The research I did took into consideration only my point of view, while the next phase of the project needs to integrate more 'others' belonging to Regentesselaan. I became an expert of the street by collecting the elements that for me contrast or succeed in belonging to the city. All these elements for me define a border within a segregated city, they allowed me to carefully analyse and prove the division within my neighbourhood. But at the same time they allowed me to find a way,

68 Urban Springtime, "The Open City" - [Online] Available: https://urbanspringtime.blogspot.com/2018/03/the-open-city.html [Last Visit: February 2022]

69 GSD TAlks: Richard Sennett, "The Open City", (2017), [Online]. Available: https://www.youtube.com/watch?v=7PoRrVqJ-FQ [November 2021]

70 GSD TAlks: Richard Sennett, "The Open City", (2017), [Online]. Available: https://www.youtube.com/watch?v=7PoRrVqJ-FQ [November 2021]

71 M. Goethals, P.. Vermeulen, "Social Space Under Construction" in: M. Dehaene, E. Vervloesem, M. Goethals, H. Yegenoglu, "Oase 96, Social Poetics The Architecture of Use and Appropriation" (NAi Publishers, Rotterdam, The Netherlands, 2016), p. 85

72 Ibid

73 F. Wekker, "Everyone Should Feel at Home. The Pitfalls and Possibilities of Inclusiveness" in: M. Besters, R. Marrades, J. Kahne, "Our City? Countering Exclusion in Public Space" (STIPO Publishing, 2019), p. 113

a place, an action, to separate or encounter the 'other'.
'Points of Entry' help me to define who lives along this street, how much they want to interact with me through the use of a curtain, or a sign on the window. 'Points of Moving' helped me to understand where I can access and where I can't, like a small sidewalk or a fenced grass area. 'Points of Staying' and specifically benches, are for me the core element to encounter 'others' and belong to the street.

What I miss at this point is the opinion of 'others', especially those inhabiting Regentesselaan. "What are for them the elements that characterise a border? And what elements separate/connect them to 'others'?" are the main questions that I will need to ask the residents of Regentesselaan in the next phase in order to understand what other characteristics are needed to create a 'border of encounter', in addition to mine, 'staying' and 'in-between'.

What I am aiming for with this project is to find a way in the City of Today to learn to deal with diversity and be exposed to it, in order to succeed in the City of Tomorrow. By designing places of coexistence between borders, where others are exposed to others, we, habitants of the City of Today, can learn to deal with diversity, tolerance, integration.

Literature and Images List

Books

T. Rieniets, J. Sigler, K. Christiaanse, “Open City, Designing Coexistence” (SUN, Amsterdam, The Netherlands, 2009)

J. Jacobs, “The Death and Life of Great American Cities” (Random House, New York 1961)

R. Sennett, “Together, the Rituals, Pleasures & Politics of Cooperation” (Penguin Books, London, England, 2013)

M. Hajer, A. Reijndorp, In search of new public domain (NAi Publishers, Rotterdam, The Netherlands, 2001)

H. Karssenberg, J. Laven, M. Glaser, M. van ‘t Hoff, “The City at Eye Level” (Eburon Academic Publishers. Delft, The Netherlands, 2016)

M. Besters, R. Marrades, J. Kahne, “Our City? Countering Exclusion in Public Space” (STIPO Publishing, 2019)

B. Hoidn “DEMO:POLIS - The Right to Public Space” (Akademie der Künste, Berlin, 2016)

H. Sarkis, How will we live together? Biennale Architettura 2021 (Silvana Editoriale, 2021)

H. Teerds, C. Grafe, C. Koekoek, “OASE #106, Table Settings. Reflections on architecture with Hannah Arendt” (NAi Publishers, Rotterdam, The Netherlands, 2020)

M. Dehaene, E. Vervloesem, M. Goethals, H. Yegenoglu, “Oase #96, Social Poetics The Architecture of Use and Appropriation” (NAi Publishers, Rotterdam, The Netherlands, 2016)

M. Pestana, “Empathy Revisited: Designs for more than one” (Onomatopee, Eindhoven, The Netherlands, 2022)

OMA, “Palermo Atlas” (Humboldt Books, Milano, Italy, 2018)

Websites

Oxford Learner’s Dictionaries - https://www.oxfordlearnersdictionaries.com/

Statistiche Istat - http://dati.istat.it/Index.aspx

Den Haag in Cijfers - https://denhaag.incijfers.nl/

UNESCO - https://en.unesco.org/

YouTube - https://www.youtube.com/

Harvard GSD, “The Architecture of Cooperation - Richard Sennett” - https://www.youtube.com/watch?v=tcXE4NEgLn8

Cambridge Law Faculty, “The Edge: borders and boundaries” youtube.com/watch?v=1VM9wqovghE&t=125s

GSD TAlks: Richard Sennett, “The Open City” https://www.youtube.com/watch?v=7PoRrVqJ-FQ

Pakhuis de Zwijger, “Designing Cities for All - Special: Making Sense of Belonging” https://www.youtube.com/watch?v=O0ewmb9XLF4&t=79s

The Guardian - https://www.theguardian.com/international

Quora - https://it.quora.com/

Urban Springtime - https://urbanspringtime.blogspot.com/

Multinclude - https://multinclude.eu/

Anemaa, “History of The Hague” - https://anemaa.home.xs4all.nl/history_the_hague/short_history_the_hague.htm

Indebuurt - https://indebuurt.nl/denhaag/

Daniels, University Toronto - https://www.daniels.utoronto.ca/

Wikipedia - https://www.wikipedia.org/

Images

Oude Landkaarten (page 35) - Historical Map of The Hague - https://www.oudelandkaarten.nl/webshop/category/den-haag?f=1

Den Haag Raadsinformatie (page 36) - Map of sand and peat division - https://denhaag.raadsinformatie.nl/document/5333115/1/RIS296987_bijlage_5_bureauonderzoek_archeologische_waarde_geversdeynootweg_e_o__2016_(noordboulevard_e_o_)

Infographics (page 46-55) - Den Haag in Cijfers - https://denhaag.incijfers.nl/

Oher images, maps, photographies and illustrations ©Caterina Tioli

Borders of Encounter
In Search for Points of Belonging

Caterina Tioli

Editor
Research
Text
Images
Graphic Design
Caterina Tioli

Guiding Tutors
Anne Hoogewoning
Gerjan Streng
Claudio Saccucci
Esther de Vries

INSIDE
Interior Architecture Master
Royal Academy of The Hague

Paper
Bio Top 3 extra 90g/m²
Color Copy Coated Glossy 135g/m²

Typeface
Igna Sans
Inter V

Royal
Academy of Art
The Hague

INSIDE

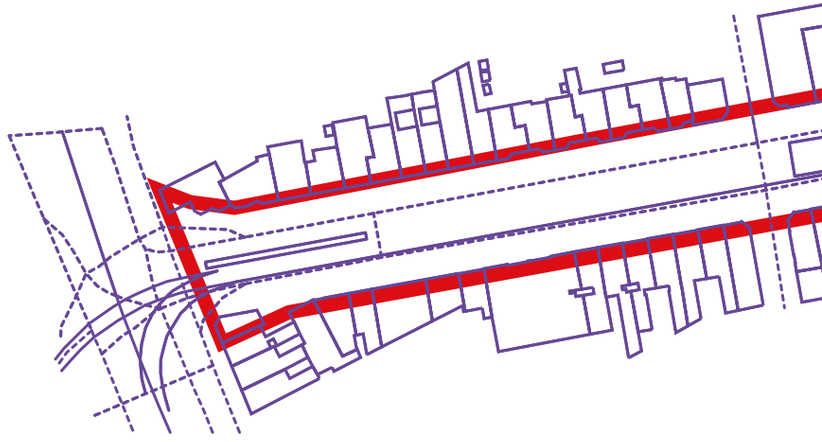

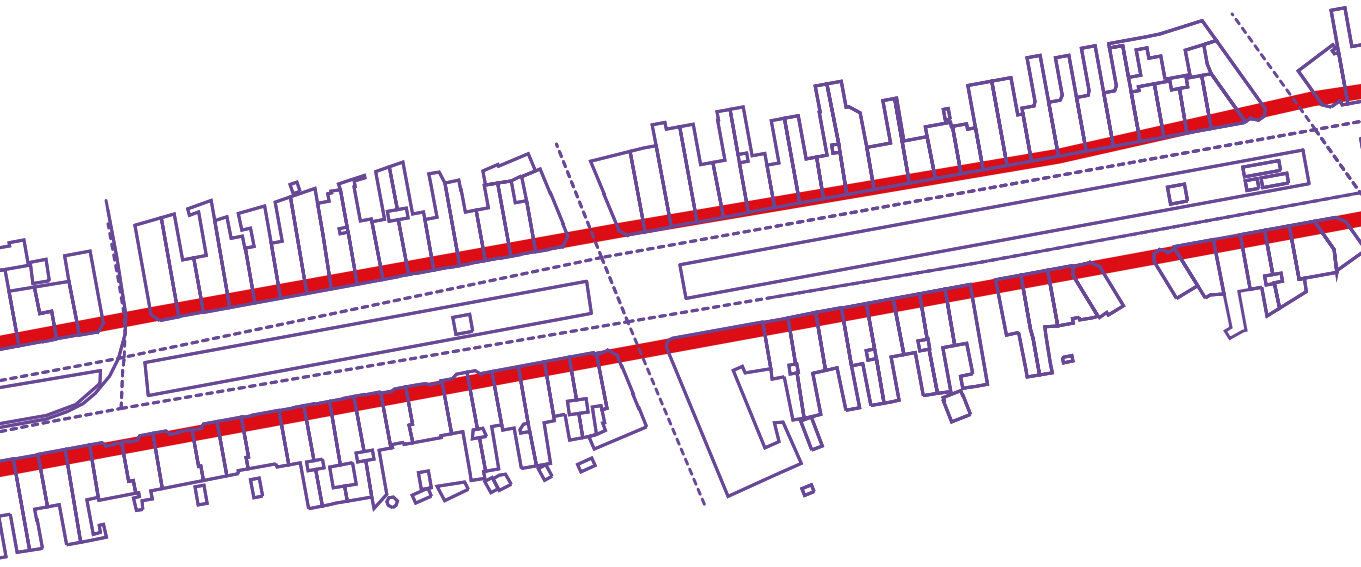

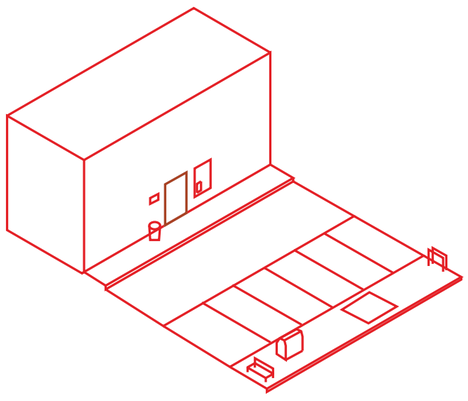

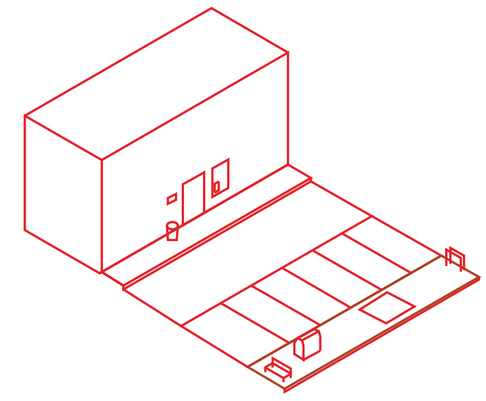

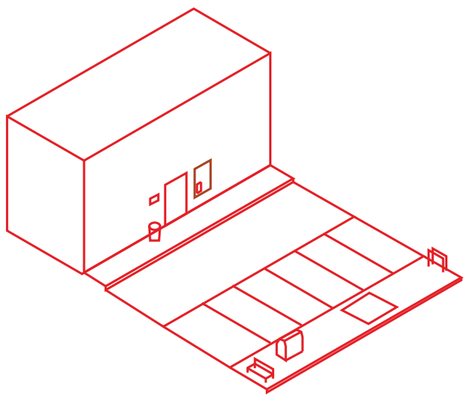

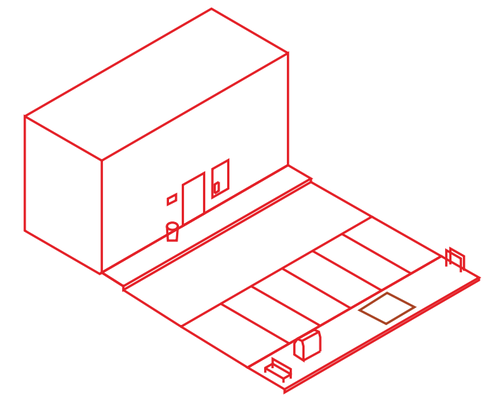

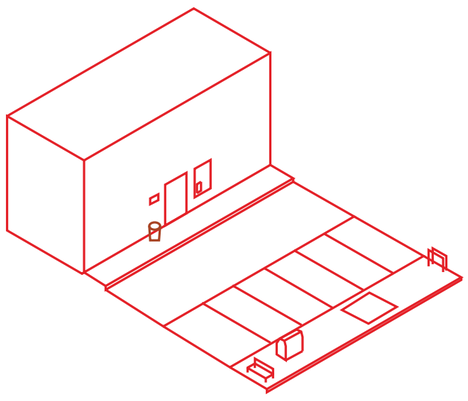

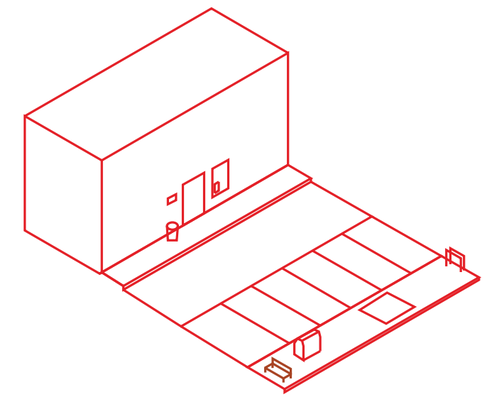

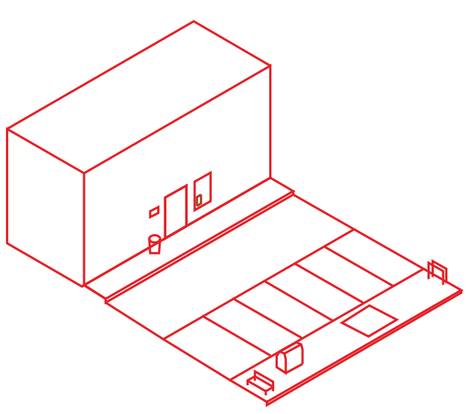

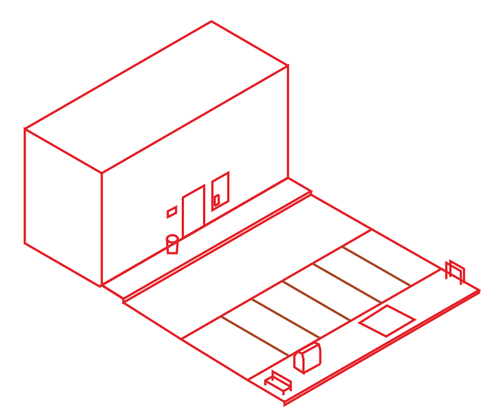

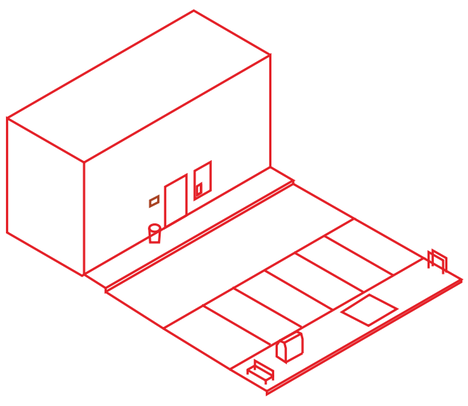

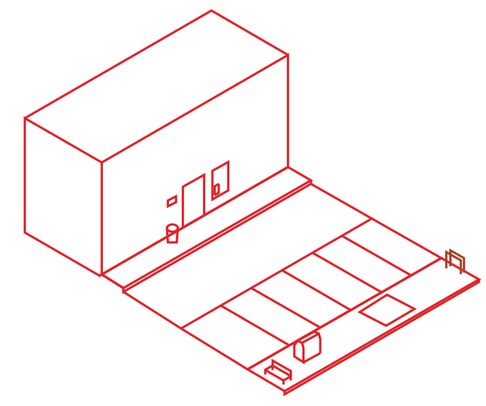

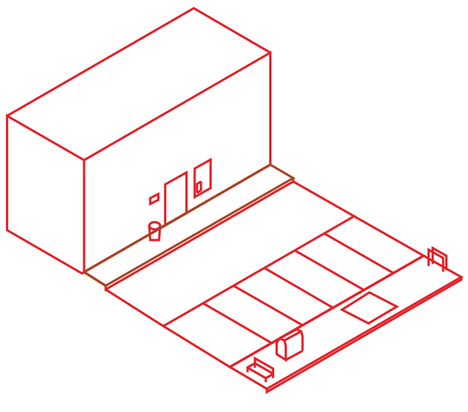

BORDERS OF ENCOUNTER

CATERINA TIOLI

IN SEARCH FOR
POINTS OF BELONGING